TWISTLOCK africa

PRODUCT & SOLUTIONS CATALOGUE

ENGINEERED CONTAINER SOLUTIONS & HARDWARE

SINCE 2015

Where Container Challenges Become Engineered Solutions

info@twistlockafrica.co.za · www.twistlockafrica.co.za

2026

SEPTEMBER 2026

REV 1.0 · 20 SEP 2026

Introduction

Twistlock Africa is a solutions company. Established in 2015, we set out not simply to supply container hardware, but to solve the real engineering challenges that arise when working with shipping containers and intermodal systems — from a single connection to complete modular plants.

This catalogue is built around that approach. Rather than presenting a list of parts and components, it is a guide to assist clients in selecting products for their specific application or challenge — be it stacking, anchoring, securing, moving, transporting, lifting or attaching accessories to containers. Our products are backed by the engineering reference data needed to specify them with confidence.

Our reach is global. Twistlock Africa has engineered and supplied container solutions across Southern Africa and on demanding international projects — from Cape Town to Miami, Senegal to Singapore and beyond — bringing the same technical depth wherever containers or modules are put to work.

Products evolve on a timeline. We continually develop and add new product lines, ranges and brands. Where an item is planned or in development, the catalogue is updated — so you always know both what is available now and what is coming.

OUR MISSION

To be the market leaders and the “go-to” team for solutions and products that solve the challenges experienced when working with containers and intermodal systems.

Contents

USING THIS CATALOGUE

How to Use This Catalogue	04	The Nine Operations	05
Situation Selector	06	Our Clients	07
Brands We Supply	08	Engineering & Bespoke	09
Equipment Hire	10	How to Order	11
Glossary	12	Disclaimer	13
Meet the Team	14	Contact Us	15
Countries We Serve	16	Industries We Serve	17
Projects	18	Revision History	158

OPERATION 1
Stacking
Connect and secure containers vertically and side-by-side. 29

OPERATION 2
Anchoring
Fix containers to foundations, slabs and structures. 39

OPERATION 3
Moving
Roll, skate and reposition containers on site. 57

OPERATION 4
Securing
Lock, protect and control access to containers. 66

OPERATION 5
Transporting
Carry and secure containers by road and rail. 76

OPERATION 6
Lifting
Raise, jack and level containers under load. 80

OPERATION 7
Fabricating
Build, repair and modify containers and modules. 90

OPERATION 8
Attaching
Attach accessories to corner castings. 102

OPERATION 9
Lashing
Restrain stacked containers on vessels and rail. 110

APPENDIX 10
Accessories
Supporting hardware and general container parts. 117

APPENDIX 11
Engineering Reference
Standards, dimensions and load data for specifying. 124

APPENDIX 12
Container Types
ISO container dimensions, tare and rated loads. 131

APPENDIX 13
Boltable Footprints
Base plates and hole patterns for setting out foundations. 152

How to Use This Catalogue

A solutions catalogue, organised the way you actually work with containers.



This is Lash.

He has been fitting this hardware for twenty years, and he turns up every few pages with the thing that **isn't** in the specification table — why a chemical anchor fails at the hole and not the rod, why a cone is not a twistlock, what the drawing does not tell you until you are on site with it.

1 Organised by what you do

Products are grouped into nine identified container operations, from Stacking to Lashing. Three reference appendices (Accessories, Engineering Reference and Container Types) support them.

2 Three ways to find a product

Browse by operation using the coloured edge tabs; start from a real task in the Situation → Product Selector; or scan the Contents at the front.

3 Reading a product page

Each page carries the product name and SKU, a product photo and an in-use image, a technical specification table, typical applications, and the symbols explained below.

4 Specifications and load ratings

Specifications are representative. Safe Working Loads and certification are confirmed per project and per order — always request written confirmation before any lifting or load-critical use.

PRODUCT PAGE SYMBOLS

These symbols appear in a row on each product page. Not every product carries every symbol — a symbol is shown only where that item genuinely exists.

Video
A video of the product, in use or being fitted. Tap it in the PDF to open.

3D model
A 3D model is available on request, for dropping into a layout or design model.

Technical drawing
A dimensioned drawing is available on request, for setout or fabrication.

Online
The product is listed on twistlockafrica.co.za. Tap it to open the website.

Available for hire
Can be hired rather than bought. See Equipment Hire.

The Nine Operations

Twistlock Africa products are divided into the 9 identified possible operations when working with modules or shipping containers. Three reference appendices support the nine.

1
Stacking
Connect and secure containers vertically and side-by-side.

2
Anchoring
Fix containers to foundations, slabs and structures.

3
Moving
Roll, skate and reposition containers on site.

4
Securing
Lock, protect and control access to containers.

5
Transporting
Carry and secure containers by road and rail.

6
Lifting
Raise, jack and level containers under load.

7
Fabricating
Build, repair and modify containers and modules.

8
Attaching
Attach accessories to corner castings.

9
Lashing
Restrain stacked containers on vessels and rail.

10 **Accessories** — Supporting hardware and general container parts.

11 **Engineering Reference** — Standards, dimensions and load data for specifying.

12 **Container Types** — ISO container dimensions, tare and rated loads.

Situation → Product Selector

Start with what you are trying to do. This selector points you to the operation and the products that solve it.

IF YOU NEED TO...	GO TO OPERATION	TYPICAL PRODUCTS
Stack and lock containers two- or three-high, vertically or side by side	1 Stacking · p.29	Manual / semi-auto / automatic twistlocks, Bridge clamps, Stacking cones
Hold containers down against wind uplift or movement	2 Anchoring · p.39	Dovetail foundations, Anchor brackets, Tie-down points
Move or roll a container across a yard without a crane	3 Moving · p.57	Castor wheels, Off-road wheel kit, Tow bars
Lock and protect a container against theft on site	4 Securing · p.66	Lock boxes, Cross-bars, Padlocks & hasps
Carry containers on a trailer or chassis	5 Transporting · p.76	Trailer twistlocks, Dovetail twistlocks, Container stops
Lift, jack or level a container on uneven ground	6 Lifting · p.80	Corner jacks, Container stands, Lifting lugs
Repair or modify a container wall, roof or door	7 Fabricating · p.90	Panels & rails, Corner posts, Corner castings, Door gear & lock rods
Mount equipment, services or signage to a container	8 Attaching · p.102	Brackets, Clamps, Shackles
Restrain a stack of containers on a vessel or wagon	9 Lashing · p.110	Semi-auto twistlocks, Lashing bars, Turnbuckles
Specify the right hardware for a container type	12 Container Types · p.131	Container Types tables, Engineering Reference data

Our Clients

Twistlock Africa is trusted by leading engineering, mining, construction and modular-building companies across Southern Africa and on international projects. A selection of the clients we have supplied and partnered with:

adp · AFRITIN MINING · AMBS · BEVCO THE BEVERAGE COMPANY · CADG · CHALLENGE · CONSULMET · CONTAINER CONVERSIONS (PTY) Ltd · Container World · Dis-Chem · ELB CONSTRUCTION · FLSmidth · FUGRO · GLOBAL AFRICA · HATCH · LogiProc · LOT-EK · M.A.C ENG. · MCA · McNAUGHTAN'S · METIX SMS group · Mineral Technologies · NORTHROP GRUMMAN · OFFWORLD · ProProcess · proxa · RALLCON · SA FIVE ENGINEERING · SOLVE · SPECIALIST SERVICES A CENTURION COMPANY · speed spares · STARK · T3 PROJECTS · telenetix Technology Solutions · TFD THERMODYNAMICS FLUIDS & DESIGN · topsoil · Unique Group Diving Equipment · VEB M.E. · VIVA ENGINEERING · WBHO · wildeklawer our fresh is best

All marks are the property of their respective owners and are shown as a record of supply.

Brands We Supply

Alongside its own manufactured range, Twistlock Africa supplies selected international brands into South Africa. Each appears in the relevant section of this catalogue under the maker's own name.

ConFoot

PORTABLE CONTAINER LEG SYSTEMS · FINLAND

Oy ConFoot Ltd of Espoo builds the patented portable leg systems that lift, support and unload a container without a crane or forklift — the CF standard leg, the CFP loading-bay leg, the CFL leg for framed containers, and the CFU, whose four built-in hydraulic bottle jacks let one operator set a container on the ground in 5–10 minutes.

confoot.fi Supplied on an order-to-supply basis via INKO 21 — see Section 6, Lifting

GLS Cargo Securing Systems

CONTAINER LASHING EQUIPMENT · CHINA

General Lashing System Co., Ltd manufactures the fixed and loose lashing gear that holds container stacks together at sea and on rail — twistlocks and midlocks, lashing and extension bars, turnbuckles, bridge fittings and deck sockets. The ISO product codes used throughout Section 9 (BD, BB, BA, BE, AL) follow their range.

generallashing.com Section 9, Lashing · Section 1, Stacking

VIRO

SECURITY PADLOCKS AND CYLINDERS · ITALY

Viro S.p.A. makes padlocks, cylinders, cam locks and safes. The VIRO 4116 armoured padlock — forged brass body, case-hardened chrome-plated armour, 7-pin anti-drill plug — is Twistlock Africa's preferred lock for its weld-on lockboxes, and VIRO is one of the barrel options on the lock rod handle isolator.

viro.it Section 4, Securing

ASSA ABLOY

MECHANICAL AND ELECTRONIC LOCKING · GLOBAL

ASSA ABLOY supplies the alternative lock barrels for the patented lock rod handle isolator: mechanical cylinders, and CLIQ electronic cylinders for sites that need auditable, time-limited keys. CLIQ is the option to specify where one key set has to manage a whole container fleet across multiple sites.

assaabloy.com/za Section 4, Securing

Domino Clamps

CORNER-CASTING MOUNTING CLAMPS · UNITED KINGDOM

Domino Clamps (Container Clamps Ltd) drop-forges a quick-connect clamp that locks into any ISO corner casting with a single 10 mm hex key and presents four M12 tapped holes on its face. Nothing is welded, drilled or cut, and the clamp lifts out again leaving the container undamaged — the standard way to hang masts, panels, signage or steelwork off a container.

dominoclamps.com Section 8, Attaching

Hilti

ANCHORING, FASTENING AND DRILLING SYSTEMS · GLOBAL

Hilti supplies the chemical-anchor system Twistlock Africa specifies for fixing containers to concrete: HAS-U threaded anchor rods in M12 and M20, injection resin, and the rotary hammers, matched bits, hole-cleaning kits and dispensers the fixing depends on. A chemical anchor is only as strong as the hole it bonds into, so the equipment is specified alongside the consumables.

hilti.co.za Section 2, Anchoring

ACE Container & Parts

CONTAINER SPARES AND HARDWARE · CHINA

ACE Container & Parts Co., Ltd of Tianjin manufactures and consolidates container spare parts and hardware. Twistlock Africa uses ACE as a supply channel into South Africa for general container spares and for GLS-sourced lashing equipment, which keeps landed cost and lead time workable on mixed, low-volume orders.

acecontainerparts.com Section 9, Lashing · Section 10, Accessories

All marks are the property of their respective owners. Product availability, lead times and supply arrangements vary by brand — please enquire.

Engineering & Bespoke Solutions

Twistlock Africa is a solutions company before it is a hardware supplier. Where no standard product answers the problem, the container or intermodal unit is engineered for it — designed and detailed in-house, then built through an established network of ISO-accredited fabricators.

CAPABILITY 01

Bespoke design and detailing

Containers and intermodal units are a structural starting point, not a finished product. Twistlock Africa takes a brief — a plant module, a mobile workshop, a relocatable facility, a one-off handling solution — through concept, engineering and detail design to a drawing package a fabricator can build from.

- Concept development against the operational brief
- Detail design and fabrication drawings
- Integration of standard Twistlock Africa hardware where it does the job
- Purpose-designed components where nothing standard fits

CAPABILITY 02

An accredited fabrication network

Twistlock Africa works through an extensive network of ISO-accredited suppliers and fabricators. That means capacity scales with the job rather than with one workshop's floor space, the work is done under an accredited quality system, and the right shop is matched to the right scope — heavy structural, precision, coatings or fit-out.

- Capacity matched to project size, not to a single facility
- Work carried out under accredited quality systems
- Local and international supply routes already established
- One point of accountability from design through to delivery

HOW A BESPOKE PROJECT RUNS

01 — Brief
What the unit has to do, where it goes, and what it has to survive.

02 — Concept
Arrangement options against cost, transport envelope and lead time.

03 — Detail design
Engineering and fabrication drawings, hardware specified.

04 — Fabrication
Built through the accredited supplier and fabricator network.

05 — Delivery
Handover, with the standard hardware supplied from stock.

PROVEN ON DELIVERED PROJECTS

The Projects pages in this catalogue are the record — modular process plant, studio and retail buildings, battery-storage housings, mining maintenance skids and a university test facility. **See Projects, from page 18.**

Every bespoke enquiry is scoped individually. Talk to Twistlock Africa early — the cheapest engineering change is the one made before the drawings are issued.

Equipment Hire

Not every job justifies buying the equipment. Container moving, lifting and securing hardware is available for hire — for a single lift, a single shift, or the full length of a project.

CATEGORY 01

Container moving equipment

Getting a container across a yard, onto a hardstand or behind a vehicle, without committing to a purchase for a job that happens twice a year.

- Castor wheel sets — bottom entry and side entry (1.8 t variants)
- Rubber castor wheels for higher-speed towing
- Off-road wheels for unprepared ground
- Tow hitches — castor and off-road

CATEGORY 02

Lifting equipment

Taking a container off its wheels or its foundation — for levelling, for a trailer release, or to set it down where no crane can reach.

- Corner jacks, and corner jacks with trestle
- ConFoot portable container legs
- Lifting lugs — side entry and top entry
- Lifting frames

CATEGORY 03

Twistlocks and securing hardware

Stacking, anchoring and lashing hardware for the duration of a contract, a shipment or a temporary installation that will later be dismantled.

- Stacking and bridge hardware
- Anchoring hardware for temporary foundations
- Lashing equipment for transport and stowage

HIRE TERMS

Hire period
Short-term hire for a single job, or project-duration hire for the length of a contract or installation.

Rates
On application. Quoted against the equipment, the period and the site.

Availability
Subject to fleet availability at the time of enquiry — book early against a fixed programme date.

Range
Not every item in this catalogue is held for hire. If what you need is not listed here, ask — the fleet changes.

ENQUIRIES

Tell us the equipment, the site and the dates and Twistlock Africa will come back with availability and a rate. **Contact details are on the How to Order page.**

Hire equipment is supplied serviceable and is checked on return. Prices are not published in this catalogue — all hire is quoted on application.

How to Order & Request a Quote

Twistlock Africa quotes on request. Pricing depends on specification, quantity, finish and project requirements — so every quote is tailored, and you pay only for what your project needs.

1

Identify what you need

Use the operation tabs, the Situation Selector or the Contents to find the right product. Note its name and SKU.

2

Note your project specifics

Quantity, container type, load and environment, plus any finish or certification requirements.

3

Send us an enquiry

Email or call us (see Contact Us). Quote the SKU and your specifics.

4

We confirm and quote

We confirm specification, certification and lead time, then issue a quotation. Stock items ship quickly; fabricated and made-to-order items are scheduled on request. Orders are delivered, or available for collection from our offices.

Enquiries info@twistlockafrica.co.za · +27 (0)11 609 7873 · www.twistlockafrica.co.za

Glossary & Key Terms

The essential vocabulary used throughout this catalogue. A fuller glossary and units primer appears in the Engineering Reference appendix.

Twistlock
A rotating-cone fitting that locks into a container corner casting to connect containers or secure them to a structure.

Corner casting
The cast-steel fitting at each of a container's eight corners (ISO 1161); twistlock, lashing and lifting connections are all made here.

ISO 1161
The standard defining container corner-casting dimensions and apertures.

GP / HC
General Purpose (2.59 m high) and High Cube (2.90 m high) container heights.

Reefer
A refrigerated, temperature-controlled container.

Dovetail
A tapered socket or foundation that locates and retains a twistlock on a trailer or slab.

Bridge fitting
A clamp that links the tops or bottoms of two side-by-side containers.

SWL
Safe Working Load — the maximum load a device is rated to carry in service.

WLL
Working Load Limit — equivalent term to SWL for lifting and lashing gear.

MBL
Minimum Breaking Load — the load at which a device is expected to fail; always well above the SWL.

Tare mass
The empty weight of a container.

Max gross mass
The maximum permitted combined weight of a container and its contents.

Stacking load
The vertical load a corner casting carries from containers stacked above (ISO 1496-1).

Racking load
The horizontal force a container structure resists, e.g. from ship motion or wind.

TEU
Twenty-foot Equivalent Unit — one 20-ft container; a 40-ft container is 2 TEU.

Disclaimer

Information in this document is subject to change without notice and should be used for general guidance only. For certified or project-specific technical data, please request confirmation from Twistlock Africa.

Product images and specifications shown are representative; actual items may vary based on availability and manufacturing tolerances.

Subject to errors of typesetting, misprints and modifications. Illustrations are generic and for reference only.

Meet the Team

Ralph Siebenhaar
SOLUTION SPECIALIST



With over two decades of hands-on mechanical engineering experience in mining mega-projects around the world, Ralph offers clients a rare blend of technical depth and practical field knowledge. His work with shipping containers and intermodal systems reflects a strong belief in engineered simplicity and real-real-world efficiency — especially in modular plant solutions, where logistics constraints and on-site time pressures demand smarter, faster, more adaptable engineering.

LinkedIn profile →

Annamarie Lourens
INTERNAL SALES



Annamarie brings a strong client-facing and operational background to the Twistlock Africa sales team, with experience spanning mining services, plant and equipment sales, and administration — including roles at Trollope Mining Services and Iron Mountain Plant Sales. She supports customers from the office with quotes, product selection and order coordination.

LinkedIn profile →

Contact Us

Contacts

Ralph Siebenhaar
Email: ralph@twistlockafrica.co.za
Mobile: +27 (0)82 825 1852

Annamarie Lourens
Email: sales.jhb@twistlockafrica.co.za
Mobile: +27 (0)76 546 2803
Landline: +27 (0)11 609 7873

61 Erasmus Road
Edenglen, Edenvale, 1609
Gauteng, South Africa

General Enquiries

Email: info@twistlockafrica.co.za
Landline: +27 (0)11 609 7873
Web: www.twistlockafrica.co.za

For product selection, quotations and project enquiries, contact us or use the details above.

Countries We Serve

Twistlock Africa supplies engineered container hardware to satisfied clients across the globe — from local South African projects to demanding international sites.

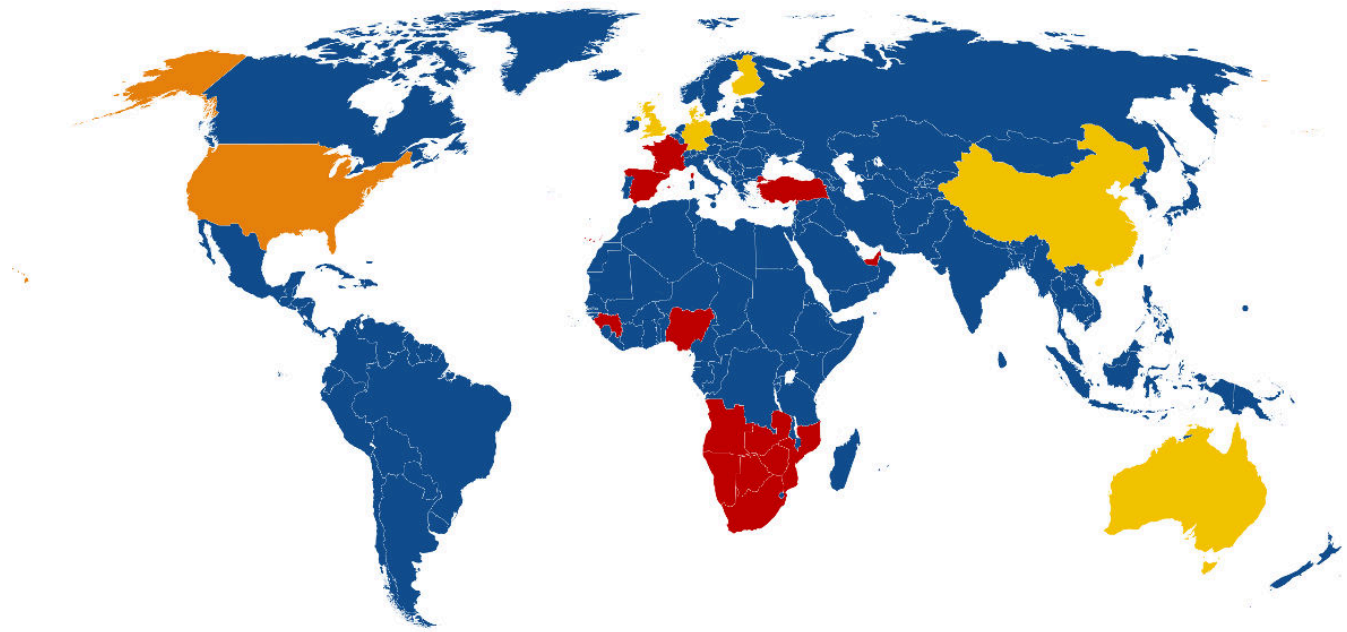

■ Countries with satisfied clients
■ Countries that supply Twistlock Africa
■ Both — client & supplier (USA)

* Products also supplied to Antarctica, Diego Garcia, Mauritius and Singapore

Industries We Serve

Twistlock Africa products are specified and trusted across a broad range of heavy and industrial sectors:

Petrochemical
Containerised process skids, control rooms and equipment shelters for refineries and tank farms, anchored for hazardous-area sites.

Mining
Modular plant, site offices, workshops and stores — moved, levelled and anchored on remote, rugged terrain.

Mineral Processing
Transportable modular plants — reflux classifiers, flotation and fines-recovery — connected and stacked as plug-and-play process lines.

Water Treatment
Skid-mounted and containerised treatment and pumping plants, anchored and serviced on temporary and permanent sites.

Material Handling
Stacking, moving and lifting hardware for depots, ports and container yards.

Construction
Site offices, ablutions, stores and modular buildings — stacked, secured and relocated as projects progress.

Agriculture
Stores, cold rooms and equipment shelters moved across farms on off-road wheels and tow systems.

Infrastructure
Containerised substations, switchrooms and battery-storage units anchored to foundations for power and telecoms.

Logistics
Trailer and depot securing, stacking and moving hardware for road, rail and intermodal operations.

Retail
Container-based retail and pop-up structures, connected and stacked into upmarket modular spaces.

Exploration
Mobile camps, labs and stores for remote exploration sites, deployed and relocated with minimal plant.

Projects

The following pages highlight some of the major projects in which Twistlock Africa has been involved. Our contribution has extended beyond the supply of components to include technical guidance on the application of intermodal principles — helping clients simplify site erection and significantly reduce installation time once modules and components arrive on site.

This section is updated periodically to showcase current and future projects involving Twistlock Africa.

Drivelines Studios — Maboneng, Johannesburg

Semi-automatic twistlocks · dovetail foundations · corner castings



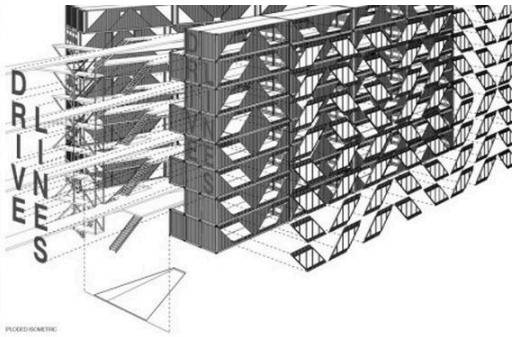

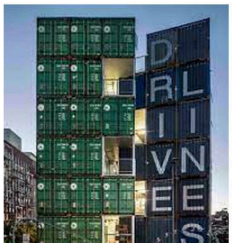

DRIVELINES STUDIOS, MABONENG — 140 UPCYCLED SHIPPING CONTAINERS OVER SEVEN STOREYS

140
SHIPPING CONTAINERS

7
STOREYS

Johannesburg
SOUTH AFRICA

The Drivelines Studios project was designed in the United States by LOT-EK and built in Maboneng, Johannesburg — a multistorey containerised building showcasing the upcycling of shipping containers for low-cost, high-design housing.

Twistlock Africa assisted LOT-EK with the design and integration of twistlocks to facilitate the quick and safe erection of the structure during construction — a showcase of using shipping containers far beyond transport and storage.

TWISTLOCK AFRICA SUPPLIED

- Semi-automatic twistlocks — locking the containers together
- Dovetails — connecting the containers to the foundation
- Corner castings — for the foundations and additional structures

ADDITIONAL INFORMATION

Architecture: LOT-EK · Structure: Silman + Asakheni Engineers

LOT-EK — Drivelines Studios · Project video

Bal Harbour Shops — Miami, Florida, USA

Bespoke hidden module connectors · 3D-printed proof of concept · assembly-sequence engineering



BAL HARBOUR SHOPS / ACCESS AS BUILT, MIAMI

28
SHIPPING CONTAINERS

2023
COMPLETED

Miami
FLORIDA, USA

The Bal Harbour project is a first of its kind, where shipping containers were used in an upmarket Miami shopping district as a form of expansion. Designed by LOT-EK and fabricated and constructed by BMarko Structures, Twistlock Africa was asked to design and supply the connections between the shipping-container modules.

In several locations, bespoke units were designed to solve access-constrained challenges. As far as possible the connectors were hidden within the structure — bespoke connectors designed in SolidWorks and 3D-printed in South Africa as proof of concept before being fabricated and installed. Twistlock Africa also proposed the assembly sequence around the site's access challenges.

The project highlighted Twistlock Africa's ability to understand client challenges, design bespoke solutions, and source products around the world.

TWISTLOCK AFRICA SUPPLIED

- Bespoke hidden module connectors
- SolidWorks design and 3D-printed proof of concept
- Assembly-sequence engineering

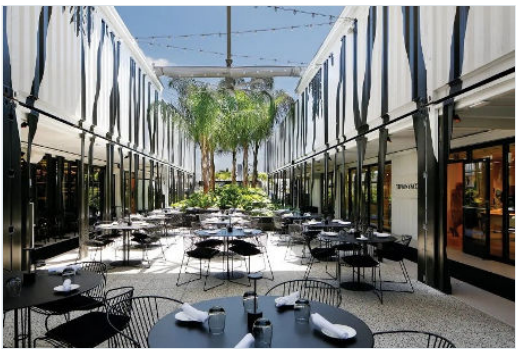

THE COMPLETED INTERIOR COURTYARD

ADDITIONAL INFORMATION

Architecture: LOT-EK · Container fabrication: BMarko Structures · Landscape: Studio Zewde · Structure: Silman

LOT-EK — Bal Harbour Shops / ACCESS · BMarko Structures — project page

BESS Solar Project — Northern Cape, South Africa

Boltable twistlocks · Hilti chemical anchors · surveyed landing pads



CONTAINERISED SUBSTATION AND BATTERY ENERGY STORAGE ON BOLTABLE TWISTLOCK FOUNDATIONS

With a growing solar-farm industry in South Africa, there is a drive for efficient installation of containerised substations and battery energy storage systems (BESS).

The implemented solution uses standard boltable twistlocks — single twistlocks on the corners and double twistlocks where two containers meet. Using Hilti anchors and epoxy, the foundations are easy to install and create a strong base; the landing pads on the twistlocks can be levelled by a surveyor before the containers arrive on site.

This guides and secures the containers to the concrete foundations and reduces crane offload time. Once landed, the twistlocks are locked using the handles, creating a positive engagement and bonding between the foundations and the containers.

TWISTLOCK AFRICA SUPPLIED

- Boltable twistlocks — single (corners) and double (joints)
- Hilti chemical anchors and epoxy

Reflux Classifier Fines Recovery Modular Plant

FLSmidth · an early Twistlock Africa modular project



THE MODULAR REFLUX CLASSIFIER PLANT — 6 M CONTAINER-SIZED MODULES RIGIDLY CONNECTED

100 t/h	2017	FLSmidth
THROUGHPUT	LAUNCHED	CLIENT

One of the projects that set Twistlock Africa on its modular-plant path. This plant consists of a number of 6 m container-sized modules rigidly connected together to create a solid foundation and structure.

Different modules incorporate the process equipment for the recovery flow sheet — MCC, control room, tanks and pumps, cyclones, screens, chutes and reflux classifiers, with mobile conveyors to stockpile recovered material and tailings.

The modular approach offers the ability to relocate with minimal staff and lifting equipment, pre-commissioning in a controlled environment, ease of transport, and expandability. This modular plant became a standard offering by FLSmidth, continuously evolving as the approach is adopted around the world.

TWISTLOCK AFRICA SUPPLIED

- Corner castings — used in the fabrication of each module
- Double-ended manual twistlocks — aligning and securing modules vertically
- Bridge clamps — pulling the modules together horizontally

ADDITIONAL INFORMATION

Partners: FLSmidth · MAC Engineering

FLSmidth launches modular Reflux Classifier plant (IM-Mining) · Plant overview video · Plant build video

Flotation Modular Plant

ProProcess · end user Anglo American Platinum · 12 m modules



MODULAR FINES-FLOTATION PLANT — TRANSPORTABLE ISO-FRAMED SKIDS

16
ISO FRAME SKIDS

2021
COMMISSIONED

ProProcess
CLIENT

A modular fines-flotation plant built for ProProcess, with Anglo American Platinum as the end user, consisting of a number of 12 m container-sized modules rigidly connected together to create a solid foundation and structure.

The modular approach offers the ability to relocate with minimal staff and lifting equipment, pre-commissioning in a controlled environment, ease of transport using flatbed or standard container trucks, and expandability.

TWISTLOCK AFRICA SUPPLIED

- Corner castings — used in the fabrication of each module
- Double-ended manual twistlocks — aligning and securing modules vertically
- Bridge clamps — pulling the modules together

ADDITIONAL INFORMATION

Partners: ProProcess Engineering (supplier)

ProProcess — containerised piloting facility · Commissioning of the modular fines flotation plant (IM-Mining)

Dry Mining Unit, Senegal

Boltable twistlocks · containerised control room · mobile mining plant

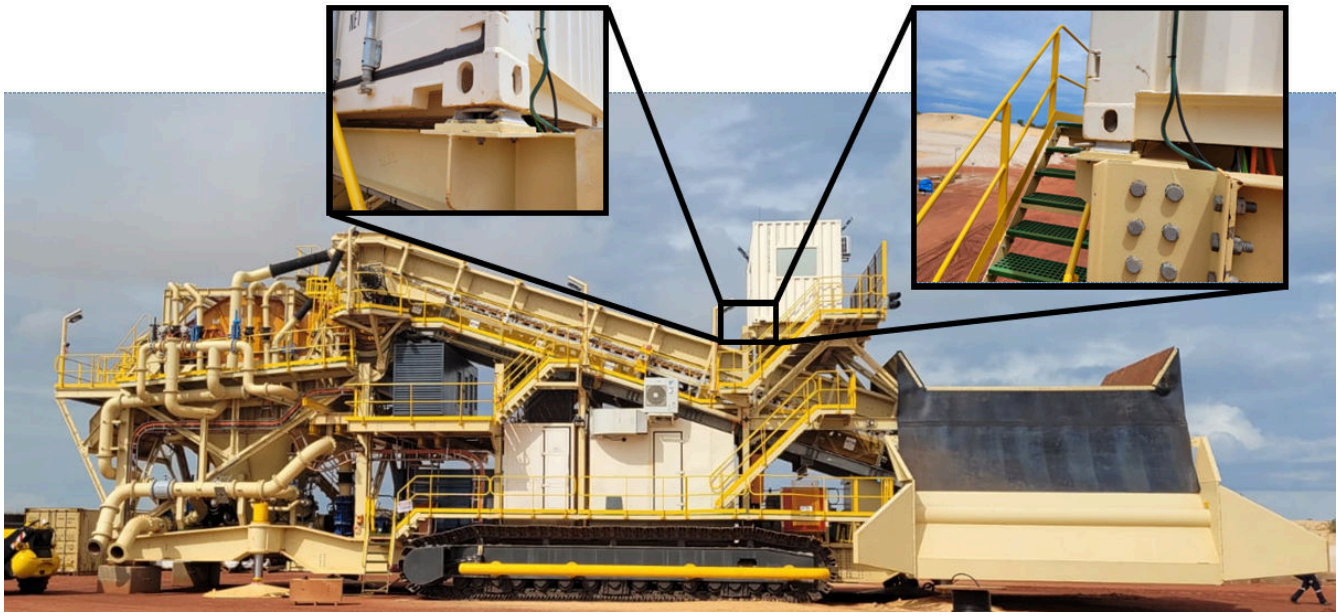

THE DRY MINING UNIT ON SITE — INSETS SHOW THE CONTAINERISED CONTROL ROOM AND ITS BOLTABLE TWISTLOCK FIXINGS

Dry Mining Unit (DMU) developed and supplied by ADP is a mobile machine that is able to traverse the sand dunes of the Sahara Desert to give the end user the ability to mine pockets of concentrated Ilmenite deposits that are off the path of the main floating concentrator, which supplies the DMU with the water and electricity required to pulp the mined sand and return the sand to the main plant for concentrating.

Twistlock Africa supplied the boltable twistlocks required to secure the containerised control room to the chassis of the dry mining unit. The boltable twistlocks provided the interface between the container and the DMU's frame.

Current indications are that the plant is working well.

TWISTLOCK AFRICA SUPPLIED

- Boltable twistlocks — securing the containerised control room to the Dry Mining Unit assembly.



GENERAL ARRANGEMENT — DRY MINING UNIT

ADDITIONAL INFORMATION

Partners: ADP Group · Challenge 2000 · Hatch

Maintenance Skid — Dry Mining Unit, Senegal

Manual twistlocks · dovetail twistlocks · boltables



THE MOBILE MAINTENANCE SKID — DRAGGED ACROSS THE SAND BY BULLDOZER

2 × 6 m
CONTAINERS

Senegal
WEST AFRICA

Hatch
DEVELOPER

The mobile skid supports the Dry Mining Unit (DMU) by providing a secure working area to maintain equipment and store consumables and spares. The skid is dragged across the sand by bulldozers.

It consists of two 6 m containers — one for ablutions and tool room, the second for the storage of spares. Together with the ablution container, a quarter-height container houses the raw-water and waste-water conservancy tanks.

Twistlock Africa supplied the connection hardware via the SMPP contractor.

TWISTLOCK AFRICA SUPPLIED

- Double-ended manual twistlocks — aligning and securing modules vertically
- Dovetail twistlocks — securing the containers to the skid
- Boltables — securing the roof to the containers

ADDITIONAL INFORMATION

Partners: ADP Group · Telenetix · Challenge 2000

ADP Group · Telenetix · Project video

Metix H_2 Test Furnace — Potchefstroom University

Containerised hydrogen test facility · intermodal connection hardware



THE CONTAINERISED H_2 TEST FURNACE INSTALLATION AT POTCHEFSTROOM UNIVERSITY

A containerised hydrogen (H_2) test furnace installation at Potchefstroom University, South Africa, delivered with Twistlock Africa connection hardware — demonstrating intermodal principles to create a transportable, quickly-deployable industrial test facility.

Part of Metix (SMS group)'s first hydrogen hot-commissioning run.

ADDITIONAL INFORMATION

Partners: Metix (SMS group)

Metix (SMS group) · Metix — first hydrogen hot-commissioning run

Wet Concentrator Plant — Moma, Mozambique

T3 Projects · Hatch · five containerised modules on a floating plant



THE WET CONCENTRATOR PLANT AFLOAT IN ITS MINING POND, MOMA

5
CONTAINERISED MODULES

2025
FABRICATED AND SUPPLIED

Mozambique
MOMA MINE

Moma, on the north-east coast of Mozambique, mines titanium mineral sands. Dredges work the ore in a mining pond and each mining operation has its own wet concentrator plant, floating alongside the dredge and advancing as the ore body is worked — so every load on its deck has to be positively located and positively held, on a structure that never stops moving.

Twistlock Africa supplied the connection between that deck and the containerised motor control centres and equipment modules carried on it. Five mounting arrangements were designed around the deck steelwork and fabricated as five distinct twistlock types, hot-dip galvanised and delivered crated to Mozambique.

A twistlock rather than a welded cleat because the modules are not permanent: they lift off for maintenance and set back down onto the same fixings, engagement made and broken by hand. No hot work on a floating plant carrying process equipment. Every base plate was laser-etched with its type, its fabrication date and a link to the project databook held online, so any unit can be traced to its own certification.

TWISTLOCK AFRICA SUPPLIED

- Boltable twistlocks — five types, one per module mounting arrangement
- Fabricated base plates — hot-dip galvanised, laser-etched and traceable
- Module masses carried: 4 820 kg to 5 500 kg per container

ADDITIONAL INFORMATION

Client: T3 Projects · Engineering: Hatch
Kenmare — the Moma mine · SAISC — the floating plant

Boltable Twistlock Load Testing — with the CSIR

Test rig design · assembly jigs · single and double plate configurations

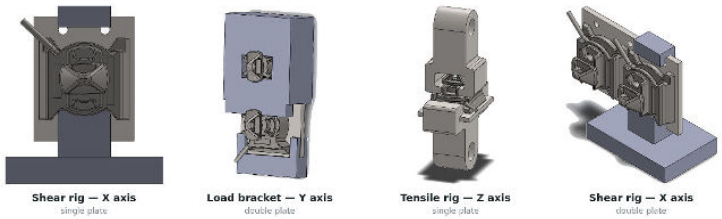

TEST RIGS DESIGNED AND BUILT IN-HOUSE — SHEAR, LOAD AND TENSILE, SINGLE AND DOUBLE PLATE

X · Y · Z load axes rigged · **Single + double** plate configurations · **CSIR** testing partner

A boltable twistlock foundation is not a bought-in casting with a plate under it. The plate, the weld detail and the fixture that holds the two in register are Twistlock Africa's own — and rather than assume they were adequate, the company built the rigs to load them and had the work tested with the CSIR.

Separate fixtures were designed for each axis: shear across the X axis, load applied through the Y axis, and tension in the Z axis — each in both the single and the double plate configuration, because the double is not simply two singles and could not be argued from the single's result.

The same programme produced the welding and assembly jigs. The jig fixes the casting to the plate in the correct position while it is welded, which is what makes the geometry repeatable from one unit to the next — and repeatable geometry is the only basis on which a test result means anything for the next plate off the bench.

TWISTLOCK AFRICA DESIGNED AND BUILT

- Shear, load and tensile rigs — X, Y and Z axes
- Rigs for both single and double plate configurations
- Welding and assembly jigs for repeatable plate geometry



TEST PIECES AFTER LOADING — THE BASE PLATE DEFORMED, THE WELD BETWEEN CASTING AND PLATE DID NOT

TEST RESULT

Testing was carried out with the CSIR in Auckland Park, Johannesburg, from 1 to 3 September 2023. The programme confirmed the welding engineering applied to this connection: in test T30954_1 the twistlock itself failed before the weld between the twistlock and the plate did — which is the result you want: the joint is not the weak link. The trace alongside is redrawn from the test record.

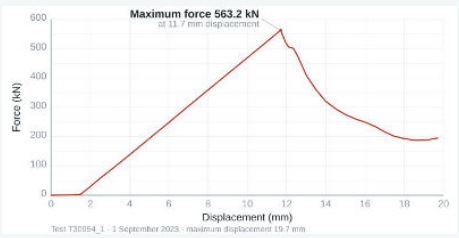

1

OPERATION 1

Stacking

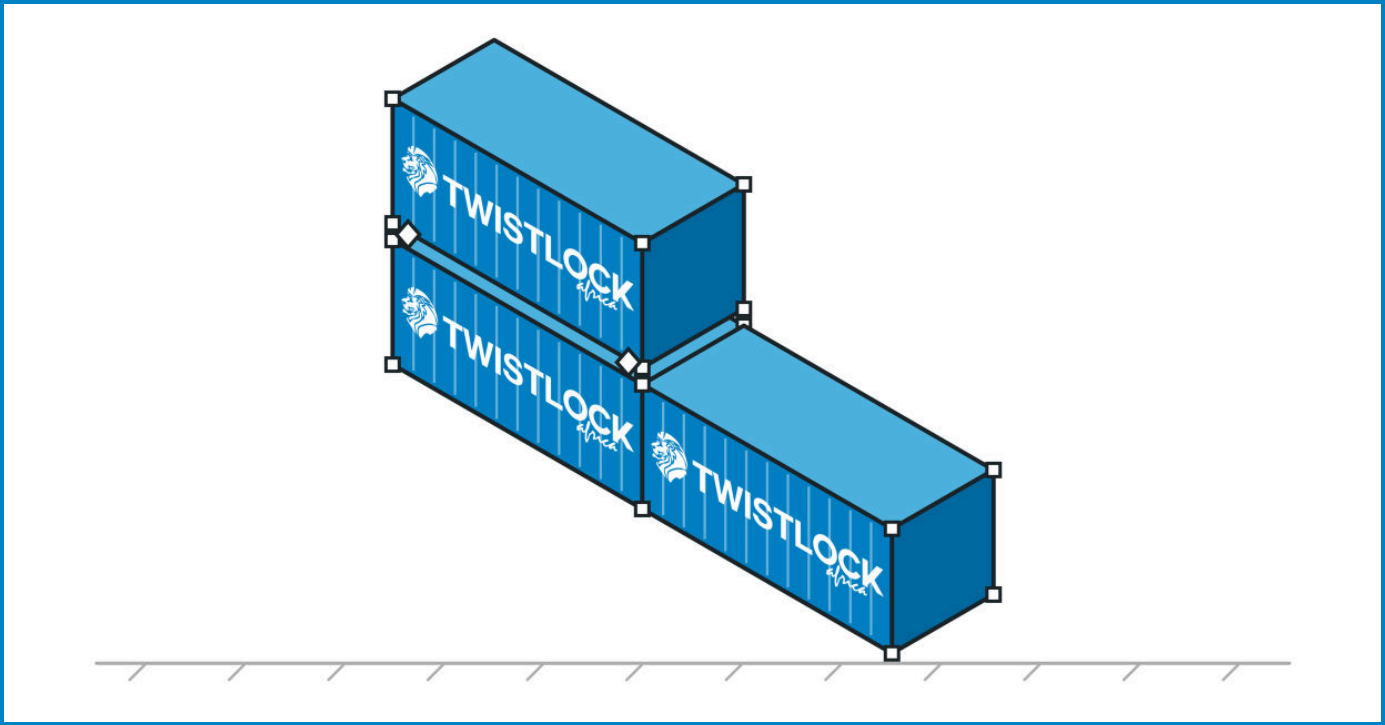

- Double ended manual twistlock
- Semi-automatic twistlock
- Fully automatic twistlock
- Bridge clamp
- Stacking cones
- Horizontal twistlock
- Vertical spacer
- 6m / 12m stacking spacer

Stacking & Assembly

Containers are engineered to stack — but only when their corner fittings are properly connected. This section covers the hardware that links containers vertically and laterally: from manual twistlocks for standard stacking to semi-automatic and fully automatic variants used in high-throughput logistics and permanent multi-storey structures.

Whether you are building a container home, a modular classroom block, or a stacked storage system on a commercial site, the twistlock you choose determines both structural integrity and the ease of future repositioning.

CHOOSE THIS SECTION WHEN…

you need to connect containers to each other — vertically, side-by-side or end-to-end — and lock the corners.

DID YOU KNOW?

A container is proof-tested to carry eight fully loaded containers stacked on top of it — 848 kN pressed through each of its four top corner castings.

ISO 1496-1, Test No. 1 — Stacking

TLA-STK-DMTL-01

Double ended manual twistlock





INSTALLED ON A CONTAINER CORNER CASTING

Manual double-ended twistlock — the industry-standard connector that locks ISO container corner castings together for safe vertical stacking, with a hand-thrown lever and clear locked/unlocked indication.

TECHNICAL SPECIFICATIONS

Material	ZG270-500 cast steel
Load Rating (SWL)	250 kN / 210 kN (SWL tension/shear) — MBL 500 kN / 420 kN
Weight	4.8 kg (model dependent)
Finish / Coating	Hot dipped galvanized
Standard	ISO 1161 (corner casting interface)

FEATURES

- Hand-thrown lever locks or releases from one side
- Lever position doubles as a clear locked/unlocked visual indicator
- Pairs with Twistlock Africa dummy stacking cones as an economical alternative to four full locks
- Available from several manufacturers — a brand-specific SKU is issued per model at order
- Compatible with all ISO-type shipping containers

APPLICATIONS

Vertical container stacking on ships and shore; container billboards and multi-storey structures; combined with stacking cones for cost-effective four-corner securing.

DESCRIPTION

Twistlock Africa's manual double-ended twistlock is the original container-securing connector and remains the workhorse for bulk-carrier decks and shore stacking, where stack height keeps the lever within reach. Throw the lever from one side to the other to lock or release; the lever position is the visual indicator. Cast from ZG270-500 steel and hot-dip galvanised for long service in marine and yard environments. Pairs with Twistlock Africa dummy stacking cones as an economical alternative to a full set of four double-ended locks. The SKU shown is the general category reference — several brands are stocked and each carries its own SKU, confirmed at quotation. Compatible with all ISO 1161 corner castings on standard 20 ft and 40 ft containers.

TLA-STK-SATL-01

Semi-automatic twistlock



Semi-automatic double-ended twistlock — engages automatically as one container lands on another; pull the toggle to lock it open for the next lift, giving crane crews an at-a-glance 'ready to lift' signal.

TECHNICAL SPECIFICATIONS

Material	ZG270-500 forged/cast steel
Load Rating (SWL)	250 kN / 210 kN (SWL tension/shear) — MBL 500 kN / 420 kN
Weight	5.0 kg (model dependent)
Finish / Coating	Hot dipped galvanized
Standard	ISO 1161

FEATURES

- Locks automatically on container placement
- Toggle pull releases and doubles as a visual ready-to-lift indicator
- Double-toggle variant available
- Several models stocked — the SKU shown is the general category reference
- Compatible with all ISO-type shipping containers

APPLICATIONS

Container ships needing quick load/unload cycles; shore stacking for container buildings, billboards and multi-storey installations.

DESCRIPTION

An evolution of the manual lock built for faster ship turnaround. The unit locks automatically on container placement and is released by pulling the toggle, whose position doubles as a visual indicator to the crane operator. Forged or cast ZG270-500 steel with a hot-dip galvanised finish for corrosion resistance. Multiple models are available, including a double-toggle option; the SKU shown is the general category reference and the model-specific SKU is confirmed at quotation. Compatible with all ISO 1161 corner castings on standard 20 ft and 40 ft containers.

TLA-STK-FATL-01

Fully automatic twistlock



Fully automatic twistlock — locks itself when containers are stacked and releases on lift, removing manual handling from routine cycles for the highest-throughput terminal operations.

TECHNICAL SPECIFICATIONS

Material	ZG270-500 forged/cast carbon steel
Load Rating (SWL)	250 kN / 210 kN (SWL tension/shear) — MBL 500 kN / 420 kN
Weight	5.0 kg (model dependent)
Finish / Coating	Hot dipped galvanized
Standard	ISO 1161

FEATURES

- Engages corner castings automatically on stacking, disengages on lifting
- No operator required at the stack
- Hot-dip galvanised carbon steel throughout for salt-laden conditions
- Compatible with all ISO-type shipping containers

APPLICATIONS

High-throughput container terminals; automated and semi-automated stacking systems where manual locking is impractical.

DESCRIPTION

Twistlock Africa's fully automatic twistlock is engineered for maximum efficiency in high-volume handling: it engages corner castings automatically on stacking and disengages on lifting, with no operator at the stack. Forged or cast ZG270-500 carbon steel, hot-dip galvanised for reliable operation in salt-laden conditions. Stock can be limited — confirm lead time at order. Compatible with all ISO 1161 corner castings on standard 20 ft and 40 ft containers.

TLA-STK-BRC-280 / -380

Bridge clamp





INSTALLED ON A TRAILER BED

Bridge clamp — locks the top corner castings of two side-by-side containers together horizontally, turning a row of containers into a single braced wall when used with twistlocks.

TECHNICAL SPECIFICATIONS

Material	Steel (can be hot-dipped galvanised)
Load Rating (SWL)	SWL 50 kN — MBL 100 kN, tension only. Not rated for vertical load
Dimensions	Available in 280 mm and 380 mm lengths
Finish / Coating	Hot dipped galvanised

FEATURES

- Tighten by turning the central nut, secure with the lock-nut
- Two SKUs — 280 mm (TLA-STK-BRC-280) and 380 mm (TLA-STK-BRC-380)
- Horizontal use only — no positive engagement vertically
- Compatible with all ISO-type shipping containers

APPLICATIONS

Horizontal locking of side-by-side containers into braced walls; temporary fixing during container construction or fabrication.

DESCRIPTION

The bridge clamp draws adjacent containers tight across their top corner castings, adding the horizontal restraint that twistlocks alone do not provide and turning a row of boxes into a braced wall. It is also the usual choice for temporary fixing during construction, fabrication or assembly, where the clamp has to come off again afterwards. Supplied hot-dip galvanised.



LASH SAYS

A bridge clamp works across, never up. It ties the top castings of two containers standing side by side — there is no positive engagement in the vertical, so it will not hold one container on another. That is a twistlock's job. Fit it horizontally, every time.

TLA-STK-CONE-xx (see variants)

Stacking cones





Stacking cones — a low-cost alternative to manual twistlocks for locating and stacking containers corner-to-corner; single, dummy, side-by-side, transverse and quad, in locally fabricated and imported options.

TECHNICAL SPECIFICATIONS

Material	Steel (local fabrication or imported cast steel)
Finish / Coating	Hot dipped galvanised (on request for local; standard for imported)

FEATURES

- Single cone — standard stacking (locally fabricated or imported)
- Dummy cone — Twistlock Africa's own design; pairs with a double-ended manual twistlock for a cost-effective permanent install
- Double side-by-side (258 mm pitch, 180 mm tight-fit) and double transverse / end-to-end (279 mm pitch, 205 mm tight-fit)
- Quad — 2×2 arrangement, locally fabricated
- Each variant carries its own SKU; local and imported options are priced separately

APPLICATIONS

Temporary and permanent container stacking; side-by-side and end-to-end configurations; 2×2 quad arrangements.

DESCRIPTION

The cone seats into the corner casting to align and locate stacked containers. Single cones suit standard stacking; the dummy cone pairs with a double-ended manual twistlock for a cost-effective permanent install; side-by-side (258 mm pitch, 180 mm tight-fit) and transverse / end-to-end (279 mm pitch, 205 mm tight-fit) versions set adjacent containers; and a locally available quad serves a 2×2 arrangement. Supplied as locally fabricated or imported cast steel, each variant carrying its own SKU. Compatible with all ISO 1161 corner castings on standard 20 ft and 40 ft containers.

TLA-STK-HTL-01

Horizontal twistlock



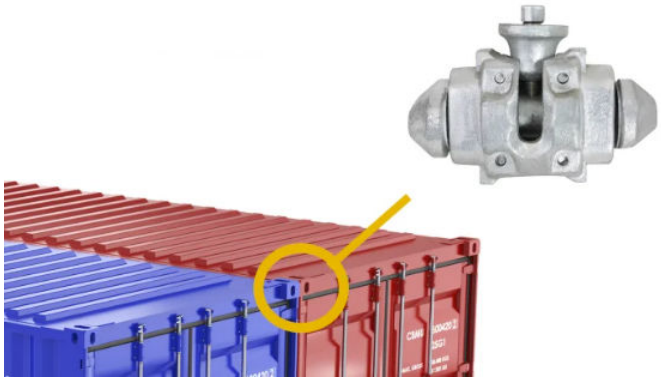

INSTALLED — SIDE APERTURE CONNECTION

Horizontal twistlock — couples two 20 ft containers end-to-end (or side-by-side) into a single 12 m unit, and anchors walkways, masts and structures to the side aperture of the top corner casting.

TECHNICAL SPECIFICATIONS

Material	Forged load-bearing twistlock in a cast steel body
Load Rating (SWL)	100 kN tension (SWL) — MBL 200 kN
Weight	4.8 kg
Finish / Coating	Hot dipped galvanized
Standard	ISO 1161 (corner casting interface)

FEATURES

- Only 2 units needed to couple containers end-to-end for handling as a single 12 m unit
- 4 units recommended for a rigid side-by-side configuration (one per corner)
- Available in flanged, lifting-eye and cable-stay-anchor variants
- Uses the oval side aperture of the corner casting

APPLICATIONS

Coupling 20 ft containers into 12 m units for transport; mounting walkways, roofs, masts and staircases to container corner castings.

DESCRIPTION

Twistlock Africa's horizontal twistlock engages the oval side opening of the ISO corner casting to join containers in line for handling as one 12 m unit, or to create a structural mounting point. Only two units are needed for end-to-end coupling; four are recommended for rigid side-by-side configurations. Available in flanged, lifting-eye and cable-stay-anchor variants to suit the connection required. Compatible with all ISO 1161 corner castings on standard 20 ft and 40 ft containers.

TLA-STK-VSP-01

Vertical spacer

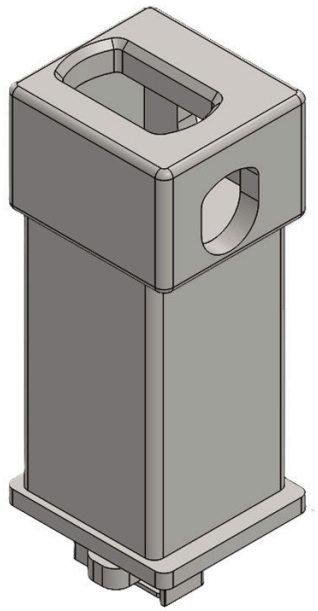

Made-to-order vertical spacer that sets a uniform 400–1000 mm gap (100 mm increments) between stacked containers for services and equipment clearance; rigid, hot-dip galvanised, Twistlock Africa branded.

TECHNICAL SPECIFICATIONS

Material	Structural steel, S355JR
Dimensions	400 mm to 1000 mm height in 100 mm increments (custom)
Finish / Coating	Hot dipped galvanized (standard); any colour on request (additional cost)

FEATURES

- Locks to the lower container's corner castings
- Upper container secured on top with standard twistlocks
- Clear gap for cable trays, pipework, walkways and plant
- Optional lugs, gussets and brackets to suit the design

APPLICATIONS

Container buildings needing a services gap; cable-tray, pipework and plant installation below the top container; exposed, wind-loaded multi-container structures.

DESCRIPTION

The spacer locks to the lower container's corner castings; the upper container is then secured on top with standard double-ended manual or semi-automatic twistlocks, giving a rigid connection suited to exposed, wind-loaded installations. The clear gap makes room for cable trays, pipework, walkways and plant. Optional lugs, gussets and brackets are added to suit the design. Compatible with all ISO 1161 corner castings on standard 20 ft and 40 ft containers.

TLA-STK-SSP-01

6m / 12m stacking spacer



Stacking spacer that levels and secures a 3 m container placed on a 6 m or 12 m container, distributing load and locking to the bottom corner casting with an internal locking mechanism.

TECHNICAL SPECIFICATIONS

Material	Structural steel, S355JR
Finish / Coating	Twistlock Africa blue (standard); any colour on request

FEATURES

- Spreads load across the lower container
- Secures to the bottom corner casting via a purpose-designed internal locking mechanism
- Supplied in Twistlock Africa blue (any colour on request)
- Lead time roughly 2 weeks

APPLICATIONS

3 m-on-6 m and 3 m-on-12 m container stacking; load distribution across the lower container; securing against lateral movement in wind.

DESCRIPTION

Placed between a short container and the longer one beneath it, the spacer spreads the load and stops the upper container shifting in adverse weather. It secures to the bottom corner casting through a purpose-designed internal locking mechanism. Supplied in Twistlock Africa blue (any colour on request); lead time roughly 2 weeks. Compatible with all ISO 1161 corner castings on standard 20 ft and 40 ft containers.

2

OPERATION 2

Anchoring

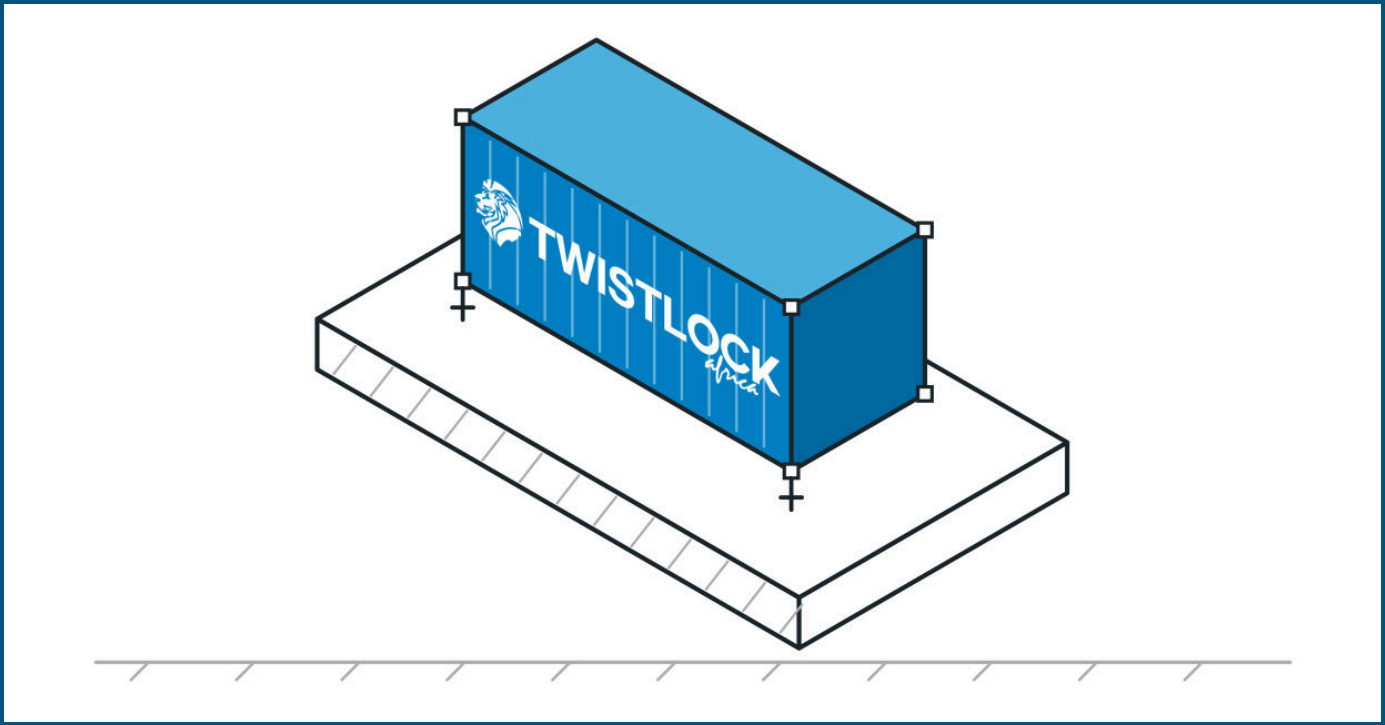

- Dovetail twistlock
- Dovetail shackle
- Dovetail twistlock slipper
- Boltable twistlock — ABD-D1
- Fabricated boltable twistlocks
- Anchor twistlock
- Breech twistlock & base
- D-Ring breech twistlock
- Corner trestle
- Deck sockets — raised
- Boltable raised deck socket
- Deck sockets — flush
- Turnfoot D-ring — 36 t / 50 t
- Landing eyes
- Hilti anchor rods & chemical anchor
- Hilti drilling, cleaning & dispensing equipment

Anchoring & Foundations

A container sitting loose on the ground is only ever one storm or one opportunist away from moving. This section covers the hardware that fixes a container permanently or semi-permanently in place — dovetail and boltable twistlocks, anchor twistlocks for concrete foundations, breech twistlocks for tight-clearance sites, cast-in posts, deck sockets, landing eyes and the Hilti chemical-anchor fixings that tie several of these systems into concrete.

Anchoring hardware is what turns a stacked or landed container into a fixed structure: a container building, a permanent site office, or cargo secured against wind uplift and theft. The same hardware works in the other direction — securing structures to containers, such as roofs, canopies and additional structures built onto or above the container.

CHOOSE THIS SECTION WHEN…

you need to fix a container to the ground, a concrete slab, or a steel structure — permanently or semi-permanently.



LASH SAYS

A chemical anchor is only as strong as the hole it bonds into. Drill it, brush it, blow it, brush it again — nine failures out of ten are the hole, not the anchor.

TLA-ANC-DVTL-xx (see variants)

Dovetail twistlock

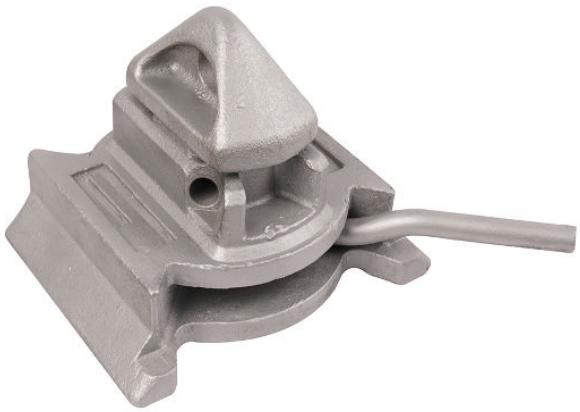



Weldable dovetail twistlock for securing containers to structures or structures to containers; available in 45° and 55° configurations, left-hand (standard) and right-hand options.

TECHNICAL SPECIFICATIONS

Material	ZG270-500 cast steel
Load Rating (SWL)	SWL 250 kN tension / 210 kN shear / 1000 kN compression — MBL 500 kN / 420 kN / 2000 kN
Mass by model	BD-D1 45° 5.4 kg · BD-D2 45° 5.1 kg · BD-E1 55° 6.36 kg — BD-F1 and BD-G1 on request
Finish / Coating	Hot Dip Galvanised
Standard	ISO 1161

FEATURES

- Handle position doubles as a clear locked/unlocked visual indicator
- Low-profile design
- Left-hand is standard; right-hand available on request (6–8 week lead time)
- Four variant SKUs: 45° and 55°, each left-hand and right-hand
- Pairs with a matching dovetail slipper for a removable installation

APPLICATIONS

Container-to-deck securing (ships and shore); container-to-structure or structure-to-container connections; combined with a dovetail slipper for removable installations.

DESCRIPTION

Originally developed for securing containers to ship decks when used with a matching dovetail slipper, the dovetail twistlock has become a general-purpose weldable connector wherever a container needs to be fixed to a structure, or a structure fixed to a container. Handle position acts as a visual locked/unlocked indicator, and the low-profile casting keeps clearance to a minimum. Cast from ZG270-500 steel and hot-dip galvanised. Left-hand is the standard configuration; right-hand is available on request with a 6–8 week lead time. The SKU shown is the general category reference — 45° and 55°, left-hand and right-hand, each carry their own SKU.

TLA-ANC-DVSH-01

Dovetail shackle



Forged D-ring welded to a dovetail plate that slides into a dovetail slipper, giving a rated, removable lashing point wherever a slipper is already installed.

TECHNICAL SPECIFICATIONS

Interface	Dovetail plate — slides into the matching dovetail slipper (see the following page)
Configurations	45° and 55°, to match the slipper installed
Load Rating	MBL 360 kN (36 t) · SWL 18 t — the D-ring is the limiting element

FEATURES

- D-ring on a dovetail plate — no welding required once a slipper is in place
- Slides into the same slipper used by the dovetail twistlock
- Removable and re-usable — the lashing point moves with the job, the slipper stays

APPLICATIONS

Removable lashing and securing points on decks, trailers and structures already fitted with dovetail slippers; project cargo securing.

DESCRIPTION

The dovetail shackle turns an installed dovetail slipper into a lashing point. Where the dovetail twistlock uses the slipper to hold a container down, the shackle uses the same socket to present a forged D-ring for chains or straps — so a deck or structure fitted out with slippers can take either, and neither needs welding on the day. It is the removable counterpart to a welded lashing eye: the slipper is the permanent part, the shackle comes and goes with the work.

TLA-ANC-DVSL-xx (see variants)

Dovetail twistlock slipper



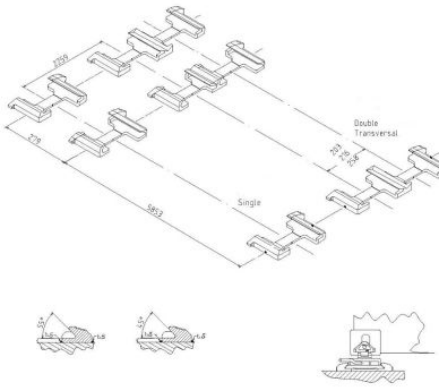

SLIPPER SETOUT — SINGLE AND DOUBLE TRANSVERSAL PITCHES

Weldable dovetail slipper (45° and 55°, single and double) providing a permanent socket for matching dovetail twistlocks, allowing containers to be repeatedly mounted and removed without a permanent twistlock.

TECHNICAL SPECIFICATIONS

Material	Steel (weldable)
Load Rating (SWL)	SWL 250 kN (MBL 500 / 420 kN)
Dimensions	Per weldable slipper drawing Rev 1 — single 258 mm; double 462 mm
Variants	AE-A1 (45°) and AE-B1 (55°) single · AE-A2 (45°) and AE-B2 (55°) double transversal
Weight	3.9 kg (single) / 7.5 kg (double)
Finish / Coating	Shop primer as supplied (weldable)

FEATURES

- Slippers should be installed in opposite directions to prevent the container sliding out
- Double slipper (shown) used where 2 adjacent containers mount side-by-side
- Suits any location where a container is repeatedly mounted temporarily — e.g. modular control rooms
- Four variant SKUs: 45° and 55°, each single and double
- Once installed, should not be relocated

APPLICATIONS

Ship decks; temporary container placements (control rooms, modular buildings); repeated installation/removal applications without a permanent twistlock.

DESCRIPTION

A weldable socket that pairs with the dovetail twistlock, so a container can be set down and lifted off the same point repeatedly without leaving a twistlock permanently in place. The setout drawing alongside gives the pitches for the single and the double transversal arrangement, together with the weld preparation for the 45° and 55° faces.

TLA-ANC-BOLT-D1

Boltable twistlock — ABD-D1



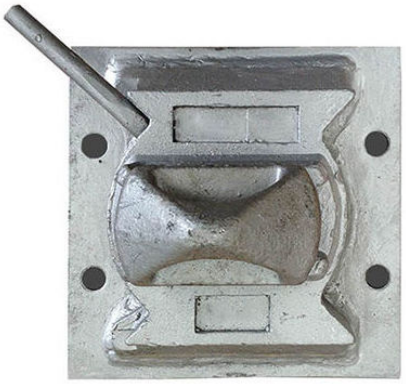

ABD-D1 bolted-on dovetail twistlock — a single-casting chassis on a 16 mm base plate that bolts to a concrete foundation or steel structure, securing a container with no permanent modification to the container itself.

TECHNICAL SPECIFICATIONS

Material	Heat treatable steel — same specification as the dovetail twistlock
Load Rating (SWL)	SWL 250 kN tension / 210 kN shear — MBL 500 kN / 420 kN
Weight	9.4 kg
Dimensions	16 mm base plate
Finish / Coating	Hot dip galvanised
Standard	ISO 1161 (corner casting interface)

FEATURES

- Single-casting chassis — 45° dovetail geometry on a bolt-down base plate
- Left-hand (ABD-D1/L) and right-hand (ABD-D1/R) versions
- Bolts to concrete or steel — no on-site welding of the container
- Fabricated boltable variants on other base plates are covered on the next page

APPLICATIONS

Permanent concrete foundations for containers; bolting to steel structures; container buildings and site offices; installations where on-site welding is not permissible.

DESCRIPTION

The ABD-D1 is the bolted-on member of the dovetail family: one casting, 45° dovetail geometry, mounted on a 16 mm base plate that bolts down to a concrete foundation or a steel structure. Because it is the same casting and the same heat-treatable steel as the standard dovetail twistlock, it carries the same 250 kN tension / 210 kN shear safe working load. Supplied hot-dip galvanised, in left-hand and right-hand versions. Where a different base-plate footprint or bolt pattern is needed, the fabricated boltable range on the following page covers those configurations.

TLA-ANC-BOLT-FAB

Fabricated boltable twistlocks

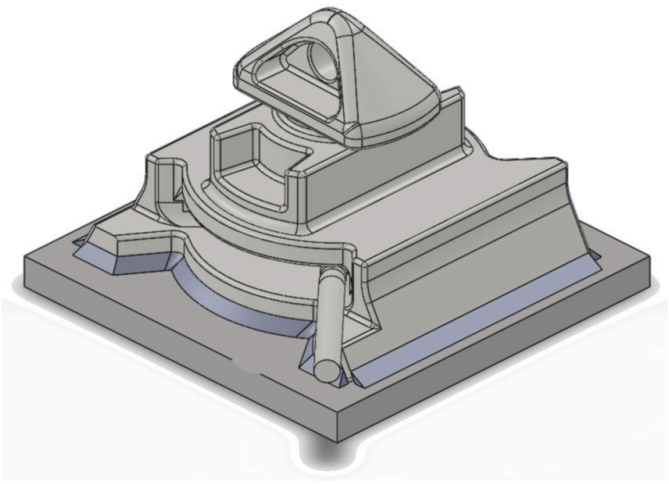

Dovetail twistlock welded to a 200 x 200 x 16 mm base plate — the standard fabricated boltable, and the starting point for any bolt pattern, footprint or mounting arrangement a site requires.

TECHNICAL SPECIFICATIONS

Material	Dovetail twistlock casting (heat treatable steel) welded to a mild steel base plate
Load Rating (SWL)	As per the dovetail twistlock — SWL 250 kN tension / 210 kN shear (MBL 500 kN / 420 kN)
Dimensions	Base plate 200 x 200 x 16 mm as standard; other footprints and bolt patterns made to suit
Finish / Coating	Hot dip galvanised, or weldable primer where site welding follows
Standard	ISO 1161 (corner casting interface)

FEATURES

- 200 x 200 x 16 mm plate as standard, hot dip galvanised
- Other footprints and bolt patterns fabricated to order
- Rating is unchanged by the base plate — casting and weld are the same throughout
- Individually marked and traceable to a job data book

APPLICATIONS

Container buildings and site offices; MCC and switchgear containerisation; structural framing; any installation where the standard ABD-D1 footprint does not suit the foundation.

DESCRIPTION

Where the standard bolted-on casting does not fit the foundation, the same dovetail twistlock is welded onto a base plate made to suit. The standard plate is 200 x 200 x 16 mm, hot dip galvanised, and is the version shown here. From that starting point the footprint, bolt pattern and plate arrangement are made to the job — single or double, fixed or slide-adjustable, and H-configuration sets for structural framing. Because the twistlock casting and the weld detail are identical regardless of the plate, the load rating is that of the dovetail twistlock throughout. Non-standard arrangements are quoted on application.

TLA-ANC-ANTL-01 / -02

Anchor twistlock

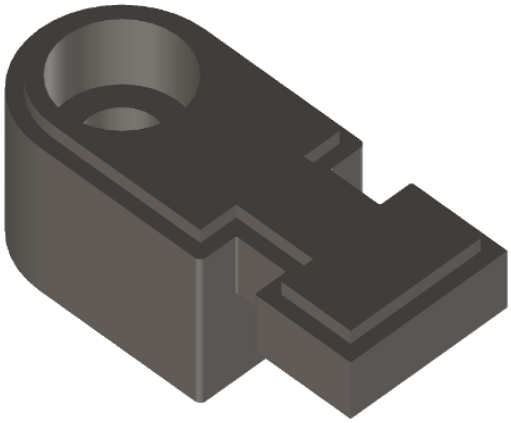

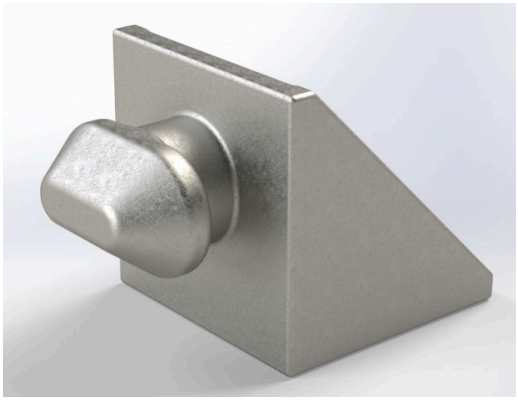

IMPORTED DERIVATIVE

Twistlock Africa-developed anchor twistlock for securing containers to concrete after placement, preventing uplift in high winds and deterring theft through upliftment; designed for Hilti chemical anchors.

TECHNICAL SPECIFICATIONS

Material	ZG270-500 cast steel
Load Rating (SWL)	SWL 40 kN tension / 20 kN shear — MBL 200 kN
Finish / Coating	Hot Dip Galvanised

FEATURES

- Developed in-house by Twistlock Africa
- Design allows the anchor bolt to be installed after the twistlock is already in place
- Through-hole allows adjustment after the anchor is installed
- Two derivatives, each with its own SKU: locally manufactured and imported
- Available in sets of 2 or 4 — kit pricing reduces cost per anchoring point

APPLICATIONS

Permanent container anchoring on concrete foundations; anti-uplift (wind resistance); anti-theft at remote sites; recommended minimum 2 opposite corners, 4 corners for maximum security.

DESCRIPTION

Developed by Twistlock Africa specifically for anchoring an already-landed container to a concrete slab, this twistlock is primarily a wind-uplift safeguard and secondarily a theft deterrent — the anchoring makes it materially harder to lift the container away. Its design lets the Hilti chemical anchor rod be installed after the twistlock is already seated, with a through-hole allowing adjustment once the anchor is in. Supplied in sets of 2 or 4; kit pricing brings the cost per anchoring point down. Requires a Hilti M20 × 240 mm anchor rod and chemical anchor — see page 55. Two derivatives are stocked, each with its own SKU: the locally manufactured unit and an imported equivalent.

TLA-ANC-BRTL-01 · base TLA-ANC-BRBASE-01

Breech twistlock & base



Bottom-entry breech twistlock for securing ISO containers from below in space-constrained situations; vibration and storm resistant. Supplied with its matching breech base — the round-foundation plate the twistlock locks into.

TECHNICAL SPECIFICATIONS

Material	Heat treatable steel — same specification as the dovetail twistlock
Load Rating (SWL)	SWL 250 kN tension / 210 kN shear / 1000 kN compression — MBL 500 kN / 420 kN / 2000 kN
Weight	Twistlock 5.5 kg · breech base 2.8 kg
Breech base (AH-A1)	Round foundation plate — SWL 250 kN tension / 210 kN shear; own SKU
Finish / Coating	Hot Dip Galvanised

FEATURES

- Bottom-entry design suits sites where there is no clearance beside the container
- Available in left or right locking configuration
- Breech base is the mating half — weld or cast into the deck or foundation
- D-Ring breech derivative available — see the following page

APPLICATIONS

Space-constrained container securing where containers are already placed directly adjacent; marine and shore stacking applications.

DESCRIPTION

Designed for locations where there is no working space beside the container — typically because an adjacent container is already in place — the breech twistlock locks from below rather than from the side. It is available in left- or right-locking configuration and is always used with its matching breech base: a round foundation plate, welded or cast into the deck, slab or steel structure, that the twistlock engages from underneath. The base carries its own SKU and is ordered alongside the twistlock, one per securing point.

TLA-ANC-BRDR-01

D-Ring breech twistlock



The breech twistlock fitted with a D-ring in place of the plain head — the same bottom-entry locking mechanism, with a lashing and tie-down point built in.

TECHNICAL SPECIFICATIONS

Material	Heat treatable steel — same specification as the dovetail twistlock
Load Rating (SWL)	SWL 250 kN tension / 210 kN shear / 1000 kN compression (breech mechanism) — MBL 500 kN / 420 kN / 2000 kN
Finish / Coating	Hot dip galvanised

FEATURES

- Same bottom-entry breech mechanism as the standard unit
- Integral D-ring gives a lashing and tie-down point at the securing position
- Available in left or right locking configuration
- Must be paired with a matching breech base deck socket, deck recess or foundation

APPLICATIONS

Space-constrained container securing where a lashing point is also required at the same position; marine and shore applications combining securing and tie-down.

DESCRIPTION

Where the securing position also has to serve as a lashing point, the D-ring derivative replaces the plain breech head with an integral D-ring. Everything below the head is unchanged — the same bottom-entry mechanism, the same left- and right-locking options, and the same requirement to pair with a matching breech base, deck recess or cast foundation.

TLA-ANC-TRES-01

Corner trestle



Scaffolding-based corner trestle jacks for levelling or raising container corners; lifting height limited to 250 mm; installed at the time of container offloading.

TECHNICAL SPECIFICATIONS

Note	Lifting height limited to 250 mm — heights above this may cause instability

FEATURES

- Built from standard scaffolding components
- Used on-site to level containers after placement
- Must be used in combination with a crane or reach stacker to install
- Typically installed at the time of container offloading

APPLICATIONS

On-site container levelling; short-term height adjustment at the time of placement.

DESCRIPTION

A simple corner jack built from standard scaffolding components, used to level a container on uneven ground once it has been placed on site. Because the trestle relies on the container corner casting for stability, its lifting height is limited to 250 mm — going higher risks instability. Fitting a trestle requires a crane or reach stacker to lift the corner while it is positioned, so it is normally installed at the time of container offloading rather than retrofitted.

TLA-ANC-DSKR-01

Deck sockets — raised





Weldable raised ISO deck sockets (single or double — side-by-side or transverse) for container stacking; compatible with manual, semi-automatic and turnfoot twistlocks; standard height 110 mm.

TECHNICAL SPECIFICATIONS

Material	Structural steel, S355JR
Load Rating	SWL/MBL: 250 kN / 500 kN tension; 210 kN / 420 kN shear
Dimensions	Standard height 110 mm (other heights available on request)
Weight	18.1 kg (/203) / 18.7 kg (/216) / 20.5 kg (/258)
Finish / Coating	Shop primer

FEATURES

- Single, double side-by-side and double transverse configurations available
- Counterpart socket for manual, semi-automatic and turnfoot twistlocks
- High tensile steel construction
- Heights other than the 110 mm standard available on request
- Single sockets also available — this page covers the two most-used configurations
- Optional engagement plate for dovetail slippers, on the single socket only

APPLICATIONS

Container stacking — counterpart to manual, semi-automatic and turnfoot twistlocks; ship decks and stacking yards.

DESCRIPTION

A weldable raised socket that gives a twistlock its counterpart connection point on a deck or steel structure, standing 110 mm proud of the surface as standard (other heights on request). Available as a single socket or as double units in side-by-side or transverse pitch to suit adjacent container spacing, and rated for the same 250/210 kN (SWL) loads as the twistlocks it pairs with. Single sockets are also available, and further variations exist beyond the two shown here; the single socket can additionally be supplied with an engagement plate for dovetail slippers.

TLA-ANC-BDSK-xx (see variants)

Boltable raised deck socket



APERTURE AND THE FOUR ANCHOR HOLES

A raised ISO deck socket on a drilled base plate — bolts down to a slab or footing instead of being welded to steel, and lifts the container clear of the ground on the same casting used elsewhere in this section.

TECHNICAL SPECIFICATIONS

Configurations	Single and double
Socket	Raised ISO deck socket, GLS AC-B1 pattern — as the preceding page
Base plate	280 × 200 × 20 mm (single)
Fixing	4 × Ø18 mm holes for anchor bolts or chemical anchors
Clearance	160 mm to the underside of the container, including the stacking twistlock
Finish / Coating	Hot dip galvanised
Load Rating	SWL 210 kN · breaking load 420 kN

FEATURES

- Available as a single or a double socket
- Bolts down — no welding, so it suits concrete as well as steel
- Gives 160 mm of clearance under the container, measured with the twistlock in place
- Pairs with double-ended twistlocks to anchor a container to a slab or footing

APPLICATIONS

Anchoring containers to concrete slabs, footings and prepared ground; modified containers needing services routed underneath; keeping a container clear of standing water.

DESCRIPTION

Where the raised deck socket on the preceding page is welded to a steel deck, this one arrives on a drilled plate and bolts down — which is what a concrete slab or a footing actually needs. The socket itself is the same casting, so the twistlock range that fits one fits the other, and it comes as a single or a double. The 160 mm of clearance is measured to the underside of the container with the twistlock in place — the room to run a waste line, and the gap that keeps a floor out of standing water.

TLA-ANC-DSKF-xx (see variants)

Deck sockets — flush

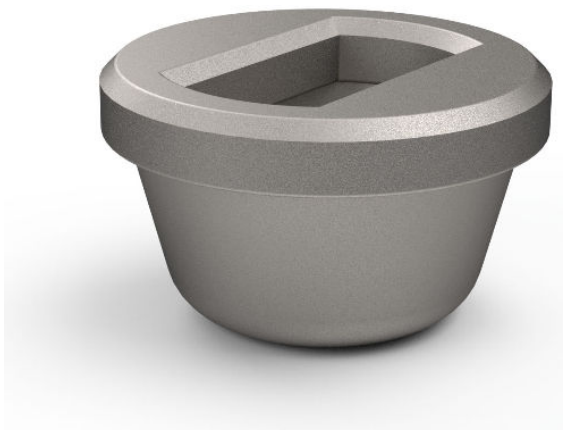



ALL FOUR VARIANTS — SINGLE, DOUBLE (SIDE BY SIDE AND END TO END) AND QUAD

Flush weldable deck sockets (single, double and quad) for tweendeck applications; DNV-GL approved; SWL 250 kN tension / 210 kN shear (MBL 500 kN / 420 kN).

TECHNICAL SPECIFICATIONS

Material	High tensile steel; weldable inorganic zinc or shop primer
Load Rating (SWL)	SWL 250 kN tension / 210 kN shear — MBL 500 kN / 420 kN
Dimensions	Top plate Ø205 mm (single), thickness 16 or 28 mm; standard pitches 203/365/258 mm
Standard	DNV-GL classification society approval

FEATURES

- Welds flush into a tweendeck rather than standing proud
- Four configurations, each with its own SKU: single, double side-by-side, double end-to-end, quad
- Top-plate thickness of 16 mm or 28 mm depending on tank-top thickness
- Tightness tested; DNV-GL approved

APPLICATIONS

Tweendeck container securing; naval and commercial shipping applications.

DESCRIPTION

Where a raised socket cannot be used — most commonly a ship's tweendeck — the flush deck socket welds in level with the surrounding plate instead of standing proud. Supplied in four configurations — single, double side-by-side, double end-to-end and quad, each carrying its own SKU — with a top-plate thickness of 16 mm or 28 mm matched to the tank-top thickness, standard pitches of 203/365/258 mm (others on request), and DNV-GL class approval. Every unit is tightness tested before dispatch.

TLA-ANC-TFDR-36 · TLA-ANC-TFDR-50

Turnfoot D-ring — 36 t / 50 t



36 t
SWL 18 t · MBL 360 kN



50 t
SWL 25 t · MBL 500 kN

Forged D-ring on a turnfoot base — the foot drops into a raised or flush ISO deck socket and locks with a quarter turn, secured by a locking pin, giving a rated removable lashing point wherever a deck socket exists.

TECHNICAL SPECIFICATIONS

Material	Forged steel
36 t variant	SWL 18 t · MBL 360 kN · 6.0 kg
50 t variant	SWL 25 t · MBL 500 kN · 7.7 kg
Interface	Raised or flush ISO deck socket — see the two preceding pages
Finish / Coating	Hot dip galvanised
Pattern reference	GLS AL-L1/36 and AL-L1/50

FEATURES

- Quarter-turn engagement with a locking pin — no welding, no tools on site
- Fits the same raised and flush deck sockets as the twistlock range
- Detachable and re-usable — the lashing point moves with the job, the socket stays
- Two sizes, 36 t and 50 t, named by minimum breaking load

APPLICATIONS

Removable lashing points in ISO deck sockets; project cargo securing; lashing containers and heavy loads on ships, trailers and flatbeds.

DESCRIPTION

The turnfoot D-ring completes the deck-socket system on the preceding pages. Its foot engages the ISO socket exactly as a twistlock does, a quarter turn locks it, and a pin secures the position — so wherever a socket is cast or welded in, the deck gains a certified lashing point that can be removed again. Chains or straps feed directly through the forged ring. Two sizes are stocked: 36 t and 50 t, named by minimum breaking load, on the GLS AL-L1 pattern.

TLA-ANC-LEYE-xx (see variants)

Landing eyes

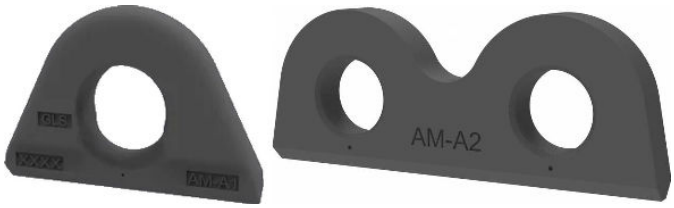

Weldable container lashing eyes (single and double types) for securing cargo; heat-treated steel; minimum breaking strength 500 kN.

TECHNICAL SPECIFICATIONS

Material	Heat-treated steel
Load Rating (SWL)	SWL 250 kN — MBL 500 kN minimum breaking strength

FEATURES

- Single, double and triple plate designs — general category SKU, variant SKU issued at order
- Used on hatch covers, decks and container pillars
- Secures and supports containers during loading, unloading and transportation
- Integrates with standard chain and fabric lashing systems

APPLICATIONS

Cargo lashing on hatch covers, container decks and pillars; securing containers during loading, unloading and transport; integration with chain and fabric lashing systems.

DESCRIPTION

A weldable lashing eye for tying cargo down during loading, unloading and transport, preventing the loosening that leads to shifted loads and accidents. Available as single, double (shown) or triple plate designs for hatch covers, decks and container pillars, in heat-treated steel rated to a 500 kN minimum breaking strength, and designed to integrate with standard chain and fabric lashing systems.

TLA-ANC-HLT-xx (see variants)

Hilti anchor rods & chemical anchor



Threaded anchor rods set in injectable resin — the chemical-anchor fixing that holds a boltable or anchor twistlock down to a concrete slab or foundation.

TECHNICAL SPECIFICATIONS

Rod — boltable twistlock	M12 × 170 mm and M12 × 240 mm, for thinner and thicker slabs
Rod — anchor twistlock	M20 × 240 mm
Material	Hilti HAS-U carbon steel threaded rod, zinc-plated
Chemical anchor	Two-component injectable resin cartridge — one line services all three rod sizes
Load Rating	Determined per installation — see the note below
SKUs	HLT-M12170 · -M12240 · -M20240 · -CHEM01

FEATURES

- M12 × 170 mm and M12 × 240 mm rods fix the boltable twistlock range
- M20 × 240 mm rods fix the anchor twistlock
- Two M12 lengths cover thinner and thicker slabs at the same diameter
- One resin line bonds all three rod sizes
- Each rod length and the resin carry their own SKU

APPLICATIONS

Fixing boltable and anchor twistlocks to concrete slabs, foundations and hardstanding wherever a cast-in fixing was not provided.

DESCRIPTION

A chemical anchor bonds a threaded rod into a drilled hole with injectable resin, giving a fixing that can be placed after the concrete has cured — which is what makes it the practical answer for containers landed on an existing slab. Rod diameter follows the twistlock: M12 for the boltable range, M20 for the anchor twistlock, with two M12 lengths so the embedment suits the slab rather than the other way round. Capacity is a property of the whole system — rod, resin, concrete grade, embedment and edge distance — and is confirmed per project rather than quoted as one figure.

TLA-ANC-HLT-DRILL · -CLEAN · -DISP

Hilti drilling, cleaning & dispensing equipment



The equipment a chemical anchor depends on — rotary hammer drill, matched bits, hole-cleaning kit and resin dispenser, supplied individually or together.

TECHNICAL SPECIFICATIONS

Rotary hammer drill	For volume drilling and larger diameters
Drill bits	Hammer bits sized to the rod — specify diameter and working length
Hole-cleaning kit	Brush and blow-out set — required for rated performance
Resin dispenser	Manual and pneumatic applicators for the resin cartridge

FEATURES

- Rotary hammer drill for volume work — hand drilling is impractical past a few fixings
- Hammer bits sized to the rod; specify diameter and working length when ordering
- Brush and blow-out kit — resin will not bond to drilling dust
- Manual dispenser for small quantities, pneumatic for volume installation
- Each item carries its own SKU — buy the set or only the piece you are missing

APPLICATIONS

Installing Hilti chemical anchors on site; container anchoring contracts where fixings run to tens or hundreds rather than a handful.

DESCRIPTION

A chemical anchor is only as good as the hole it bonds into, which is why the drilling and cleaning equipment is specified alongside the rods and resin rather than assumed. Drilling dust left in the hole is the most common reason a chemical fixing fails to reach its rated capacity — the brush and blow-out kit is part of the installation, not an accessory. On a handful of fixings a manual dispenser will do; on a contract, the pneumatic dispenser and a rotary hammer pay for themselves in a morning.

OPERATION 3

Moving



- Castor wheels — bottom entry
- Castor wheels — side entry
- Tow hitch — castors
- Off road wheels
- Rubber castor wheel — 2.25 t/wheel
- Tow hitch — off road
- Pulling lug

Moving & Transport

A container does not have to stay where it lands. With the right mobility hardware, a standard ISO container can be repositioned by a single operator, towed across a yard, or relocated between sites without a crane or forklift.

This section covers castor wheel systems for smooth surfaces, off-road wheel sets for rough terrain, and tow hitches compatible with standard vehicles and agricultural equipment — useful anywhere container positions change regularly. The pulling lug completes the set for dragging and aligning containers where wheels are not the answer.

CHOOSE THIS SECTION WHEN…

you need to reposition or roll containers around a site without a crane.

TLA-MOV-CWBE-18 / -35 / -50 · -TL (with twistlock) / -PL (without)

Castor wheels — bottom entry

1.8 t · 3.5 t · 5.0 t

Heavy-duty bottom-entry castor wheels — lock into the bottom corner casting via a dovetail twistlock interface so a container can be towed and manoeuvred on hard, flat surfaces such as concrete, paving and asphalt. Three capacities, all in Twistlock blue. Castors are supplied with or without the twistlock, each combination carrying its own SKU.

BOTTOM-ENTRY CASTOR RANGE

	1.8 t	3.5 t	5.0 t
			
SKU	TLA-MOV-CWBE-18	TLA-MOV-CWBE-35	TLA-MOV-CWBE-50
Load rating (per castor)	1.8 t	3.5 t	5.0 t
Wheel Ø × width	250 × 75 mm	250 × 75 mm (twin)	400 × 75 mm (twin)
Overall height (with twistlock)	388 mm	388 mm	596 mm
Mass per wheel	25 kg	45 kg	84 kg
Brake	Thumb screw onto wheel rim	Thumb screw onto wheel rim	Thumb screw onto wheel rim
Type	Swivel only	Swivel only	Swivel only
Short-term hire	Available	—	—

FEATURES & OPTIONS

- Bottom-entry twistlock engagement — no drilling or welding; interface plates steady the wheel in operation
- Separate SKUs for castors supplied with the twistlock and without it
- Optional swivel lock available (at 90° intervals)
- Optional steering arm for the 3.5 t and 5.0 t variants
- 3.5 t and 5.0 t castors are fitted with a bespoke stand to aid moving and installation
- Short-term hire available for the 1.8 t variants

SUITABLE SURFACES

Hard, flat, prepared surfaces — concrete, paving and asphalt. For unpaved or uneven ground see the off-road wheel kit later in this section.

DESCRIPTION

Developed for the severe conditions of powered towing — abnormally large impact loads as well as static loads — the castor range carries the container on a precision swivel. A threaded main stem sets preload, and 16 mm plate legs are welded to the housing. The castor locks into the bottom corner casting via the dovetail twistlock interface, and pairs with the castor tow hitch later in this section.

TLA-MOV-CWSE-18 / -35 / -50

Castor wheels — side entry



A special bracket that connects castor wheels to the side of a shipping container — for moving containers where headroom is limited. Works with flanged castor wheels only.

TECHNICAL SPECIFICATIONS

Castor type	Flanged castor wheels only
Capacities	1.8 t · 3.5 t · 5.0 t — a separate SKU for each
Height adjustment	0 – 25 mm
Lift (1.8 t / 3.5 t castors)	50 – 100 mm
Under-container gap (5.0 t castors)	≈ 100 mm
Compatibility	One bracket fits all castor sizes
Short-term hire	Available with the 1.8 t variants

FEATURES

- Side connection — the container barely lifts, clearing low-headroom routes
- Height adjustable through 0–25 mm
- Works with flanged castor wheels only
- One bracket serves 1.8 t, 3.5 t and 5.0 t castors — a SKU per capacity
- Short-term hire available with the 1.8 t variants

APPLICATIONS

Low-headroom container moves; workshops, factories and buildings with restricted height above the container.

DESCRIPTION

Where a container must move under a roof, gantry or mezzanine that leaves no room for bottom-entry castors, the side-entry bracket mounts the castor on the side of the container instead: with 1.8 t or 3.5 t flanged castors the container lifts just 50–100 mm, and with the 5.0 t castors the gap under the container is approximately 100 mm. The bracket adjusts through 0–25 mm and the same bracket is used for all castor sizes, with a separate SKU for each capacity.

TLA-MOV-HITCHC-01

Tow hitch — castors





PRODUCT IN USE

Folding ISO container tow bar — twistlock ends plug straight into any ISO 1161 bottom corner casting for yard and depot towing on Twistlock Africa castor wheels; 18 t and 30 t options, with 20° articulation for vehicle/container height differences.

TECHNICAL SPECIFICATIONS

Load Rating (SWL)	18 t or 30 t (specify at order)
Articulation	20° rotation range
Standard	ISO 1161

FEATURES

- Twistlock ends — direct corner-casting engagement, no adapter
- 20° articulation absorbs vehicle/container height differences
- Folds compact for storage and transport between uses
- Two capacity classes: 18 t and 30 t

APPLICATIONS

Container towing in depots, workshops and yards on castor wheels; repositioning containers on flat ground.

FOR HIRE

DESCRIPTION

The standard tow bar for moving containers on castors across flat, prepared surfaces. Twistlock ends connect directly to the bottom end apertures of the corner fittings with no adapter, and a 20° rotation range absorbs height differences between the towing vehicle and the container. Capable of towing fully loaded standard ISO shipping containers up to 18.1 t (40 000 lbs); folds compact for storage between uses.

TLA-MOV-ORW-01

Off road wheels

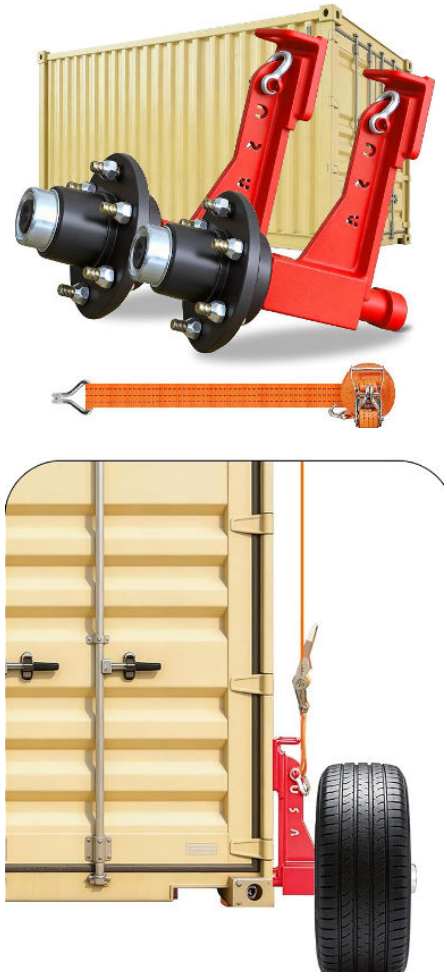

PRODUCT IN USE

Off-road container wheel kit — the axle brackets hook into the side apertures of the bottom corner castings and are secured with heavy-duty ratchet straps, while the front is towed on the Twistlock Africa ISO tow bar; 4 t per pair, on a serviceable 6-stud vehicle hub, built for rough African ground.

TECHNICAL SPECIFICATIONS

Load Rating (SWL)	4 t per pair (2 wheels)
Hub	Steel assembly, 6-stud (6-ear) standard vehicle bolt pattern — 8-stud available on request
Kit contents	2 pre-assembled wheels · 2 screw-pin anchor shackles · 1 set of ratchet tie-downs
Limitation	Empty containers only
Short-term hire	Available
Standard	ISO 1161 (corner casting interface)

FEATURES

- Hooks into the side apertures of the bottom corner castings — no drilling or welding
- Supplied as a left- and right-hand pair, shown complete above
- Serviceable 6-lug vehicle hub
- Short-term hire available; pairs with the off-road tow hitch

APPLICATIONS

Relocating containers on mine sites, farms and construction sites without heavy lifting plant; moving over rough or unpaved ground.

FOR HIRE

DESCRIPTION

Purpose-built for sites where containers must cross unpaved or uneven ground that defeats standard castors: each bracket hooks into the side aperture of a bottom corner casting and is cinched tight with its heavy-duty ratchet strap — no drilling, welding or modification. The kit suits 20 ft to 40 ft containers, empty only; the rear pair carries the container while the front tows on the ISO tow bar. The standard 6-stud hub keeps wheels, bearings and studs serviceable from any parts shop.

TLA-MOV-RCW-50

Rubber castor wheel — 2.25 t/wheel





DOVETAIL TWISTLOCK ENGAGED IN THE CORNER CASTING

Heavy-duty rubber-tyred container castor with a dovetail twistlock mechanism — a 22-inch wheel on a swivel castor that lets a loaded container be moved without a crane or forklift; rated 2.25 t per wheel, supplied as a set of four.

TECHNICAL SPECIFICATIONS

Type	Rubber container castor wheel, swivel — ACE DCW-R-5T
Wheel Ø × width	541 mm (22") × 160 mm
Assembly	681 mm high · 528 mm across the pair
Capacity (each)	2.25 t (2 250 kg) per wheel
Weight	130 kg each — supplied 4 per plywood box
Capacity (set of 4)	9 000 kg payload at up to 10 km/h · 5 000 kg at up to 20 km/h
Fixing	Dovetail twistlock mechanism — no drilling or welding

FEATURES

- Rubber tyre absorbs shock on rougher yard surfaces than a solid castor tolerates
- Dovetail twistlock fixing — installs without drilling or welding
- Rated 2.25 t per wheel — a set of four carries 9 000 kg, and capacity falls with towing speed
- Heavy-duty steel construction throughout

APPLICATIONS

Moving loaded containers around yards, depots and construction sites at controlled speeds; relocating containers where a crane or forklift is not available.

DESCRIPTION

The rubber castor is the rough-ground end of the castor range: a 22-inch rubber-tyred wheel on a swivel castor with a dovetail twistlock mechanism, so it installs into the corner casting without drilling or welding. Each wheel is rated 2.25 t and it is specified as a set of four — 9 000 kg at up to 10 km/h, or 5 000 kg up to 20 km/h. The tyre absorbs the shock loads that break solid-wheel castors on rougher ground.

TLA-MOV-HITCHR-01

Tow hitch — off road



Off-road container tow hitch — connects the front bottom corner castings to a standard 2 5/16" ball hitch on any utility vehicle, tractor or telehandler. For empty containers only, behind a vehicle rated to 6.4 t gross towing capacity. Built in heavy-gauge steel for rough terrain.

TECHNICAL SPECIFICATIONS

Use	**Empty containers only** — not rated for a loaded container
Towing vehicle	Rated to 6.4 t gross towing capacity
Material	Heavy gauge steel
Interface	ISO 1161 (container) · 2 5/16" ball hitch (vehicle)
Short-term hire	Available

FEATURES

- Empty containers only — the off-road wheel kit is not rated to carry a loaded container, so the towing system is not either
- Standard 2 5/16" ball coupling — hitches to any utility vehicle, tractor or telehandler
- Engages the front bottom corner castings directly
- Heavy-gauge steel for rough terrain
- Short-term hire available
- Pairs with the off-road wheel kit earlier in this section

APPLICATIONS

Off-road container towing on farms, mines and construction sites; paired with the Twistlock Africa off-road wheel kit; towing behind utility vehicles, tractors and telehandlers.



DESCRIPTION

A different design from the castor-wheel tow bar, engineered for off-road and agricultural towing across rough ground, and supplied as a complete kit with fixing screws and extra-thick customised bolts. On the load question: the 6.4 t figure is the gross towing capacity required of the towing vehicle, not a rating for the container being moved. A loaded 20 ft box can reach 30 480 kg, and neither this hitch nor the off-road wheel kit it pairs with is rated to carry it. Move the container empty and load it once it is in position.

TLA-MOV-PLUG-01

Pulling lug



Container pulling lug — the flat plate lug drops its T-tab into the ISO 1161 corner casting aperture, presenting a large eye for a shackle, chain or wire rope to drag and reposition containers at ground level.

TECHNICAL SPECIFICATIONS

Material	Steel plate
Load Rating (SWL)	5 t — horizontal pulling only
Finish / Coating	Hot dip galvanised, painted Sunrise Yellow
Standard	ISO 1161 interface — NOT rated for vertical lifting

FEATURES

- T-tab drops into the corner casting aperture — no tools, no modification
- Large eye takes shackle, chain or wire rope
- Horizontal dragging only — never vertical lifting
- HDG under Sunrise Yellow paint for visibility and corrosion protection

APPLICATIONS

Container depot repositioning; alignment onto trailer or low-bed; site foundation placement; workshop manoeuvring without crane; low-clearance and restricted-access sites.



DESCRIPTION

Used when a container must be pulled or dragged into position without lifting equipment — common on construction sites, in container depots, and during modified container installations where crane or forklift access is limited. The flat plate lug drops into the corner casting aperture and takes the towing shackle or chain through its eye. Safe working load 5 t, horizontal use only.

4

OPERATION 4

Securing

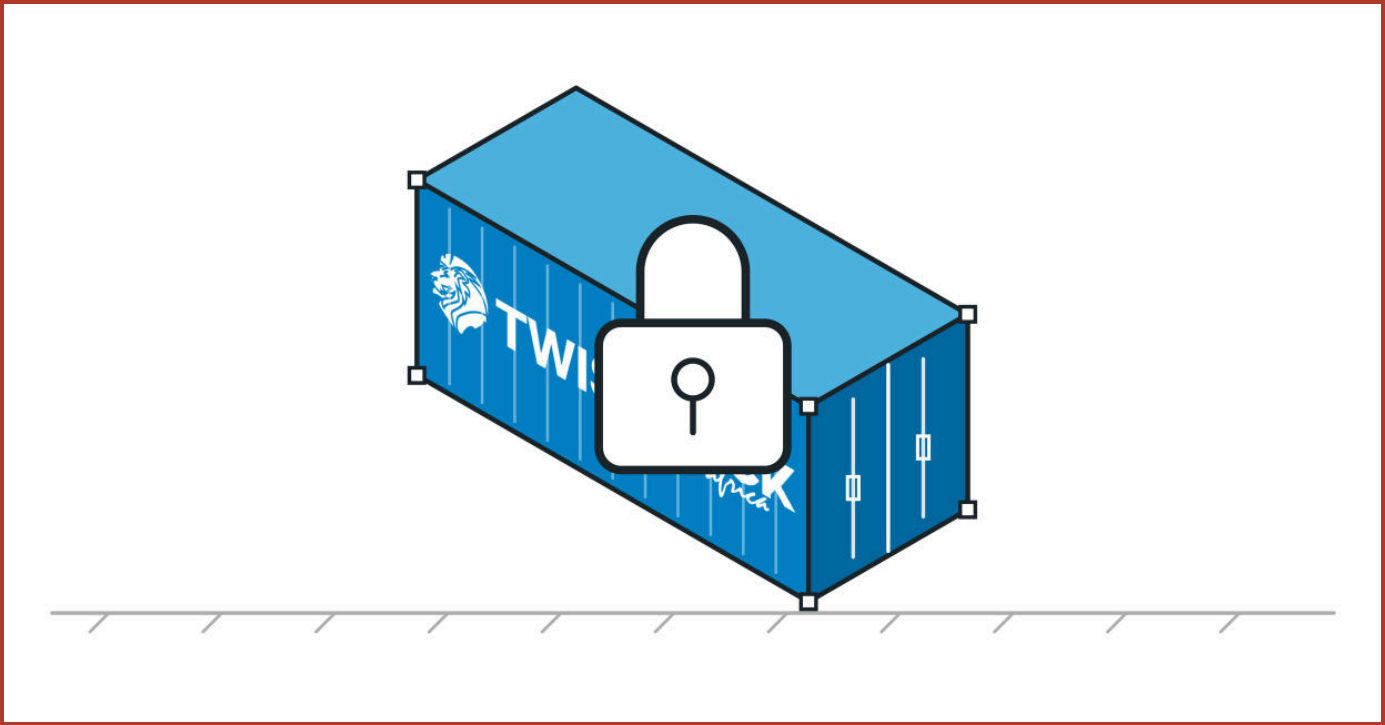

- Lock rod isolator
- Lock rod handle isolator
- Lock rod handle isolator with crossbar
- Lock box (weld on)
- Lock box specific padlocks
- Handle clutchbox
- Loose lock box (slip-on)

Security

A container's standard door latch provides closure, not security. This section covers hardened lockboxes, hasps, padlock clutches and anti-tamper hardware designed to resist forced entry.

Relevant wherever a container holds tools, equipment or inventory — building sites, farms, remote facilities, retail storage — and especially in locations where surveillance or on-site personnel cannot be relied on as the primary deterrent. All of the products in this section can be combined — they work together and in parallel, layering security to suit the site and the risk.

CHOOSE THIS SECTION WHEN…

you need to lock, protect or control access to a container and its contents.

How a container actually gets opened

Container doors are not defeated all at once. They are defeated in an order, and it is almost always the same order — because a thief works from the outside in, taking the easiest thing first. Knowing that order is the whole argument for layering hardware rather than buying one very good lock.

1

The padlock

An exposed shackle is the first thing tried and the fastest thing to beat. Bolt croppers need only a few seconds and very little skill, and a shackle standing proud of the door gives them everything they need to bite on.

WHAT SLOWS IT A lock box encloses the padlock so only the shackle is reachable, and a shrouded or disc padlock leaves almost nothing to cut. Neither is exotic; both are on the following pages.

2

The lock rods and handles

With the padlock gone, or where none was fitted, the handles are next. A handle is a ready-made lever, and the rods it turns are comparatively slender. Levering or cutting one rod is often enough to release a whole leaf.

WHAT SLOWS IT A lock rod isolator hardens the rods against cutting and bending. A handle clutchbox removes the leverage by taking the handle out of use altogether.

3

The cams and keepers

A determined attack moves to the cams at the top and bottom of each rod, or to the keepers welded to the frame. This takes longer, makes noise, and usually needs a grinder.

WHAT SLOWS IT This is where layering pays. Every step above that has already cost time forces the attack into the step that is loudest and slowest — which is the one most likely to be abandoned.

4

Nobody watching

The step that actually decides the outcome is not on the door at all. Container theft concentrates where a container stands unattended, out of sight, and unlit. Hardware is attacked where nobody is likely to interrupt.

WHAT SLOWS IT Stand the doors against a wall, another container or a bank where they cannot be swung open. Light the approach. Hardware buys time; only somebody arriving turns that time into a deterrent.

> **WORTH SAYING PLAINLY**
>
> No container lock is impregnable, and we would rather say so than pretend otherwise. Given enough time, tools and privacy, any door can be opened. What good hardware buys is time and noise — enough of both that the attempt is abandoned, or that somebody notices while it is still an attempt. That is why the products in this section are designed to be combined rather than chosen between: each one moves the attack on to a slower, louder step than the last. Choose for the site and the risk, not for the catalogue page.

TLA-SEC-LRI-01

Lock rod isolator





PRODUCT IN USE

Quench-hardened lock rod isolator — the industry-standard removable device for securing liner-owned containers in transit; adjusts to different container configurations and takes a replaceable UNION lock, keyed-alike on request.

TECHNICAL SPECIFICATIONS

Material	Quench hardened steel assembly
Lock	Replaceable UNION lock — keyed-alike on request

FEATURES

- Removable and reusable — comes off at destination
- Adjusts to a range of container configurations
- Quench-hardened against cutting and bending

APPLICATIONS

Securing liner-owned containers in transit; on-site storage container security; truck-body lock-rod security.

DESCRIPTION

Fitted over the door lock rods, the isolator's quench-hardened steel assembly sharply increases resistance to cutting and bending, then comes off and is reused at destination. It adjusts to suit a range of container configurations, and the UNION lock is replaceable and can be keyed alike across a fleet.

TLA-SEC-LRHI-xx (see variants)

Lock rod handle isolator





PRODUCT IN USE

Patented armour-plated lock rod handle isolator — covers the lock rod handle to secure the container door with no modification required; available with VIRO, Assa Abloy mechanical or Cliq electronic locking.

TECHNICAL SPECIFICATIONS

Material	Armour-plated construction
Locking options	VIRO · Assa Abloy mechanical · Assa Abloy Cliq electronic
Installation	No drilling, no welding
Keying	Various brands of locks and keys — keyed-alike available

FEATURES

- Patented design — thousands in service across Africa
- Concealed internal locking mechanism
- Installs with no modification to the container
- Fleet key-management options via Cliq electronic locking
- A separate SKU for each lock barrel option, and for keyed-alike sets

APPLICATIONS

Container door security in storage and transit; truck and vehicle door security; access-controlled sites using the Assa Abloy Cliq option.

DESCRIPTION

This patented isolator encloses the lock rod handle in an armour-plated casing with a concealed internal locking mechanism, and installs without drilling or welding. Thousands are in service across Africa, and the locking cylinder is available in VIRO, Assa Abloy mechanical or Cliq electronic configurations to suit site key-management requirements. Each lock barrel option carries its own SKU, as do keyed-alike sets.

TLA-SEC-LRHX-xx (see variants)

Lock rod handle isolator with crossbar





PRODUCT IN USE

Lock rod handle isolator with crossbar — adds a solid steel bar linking both door lock rods for a second layer of security, fitted with anti-removal pins to defeat disassembly.

TECHNICAL SPECIFICATIONS

Material	Armour-plated body; solid steel crossbar
Locking options	VIRO · Assa Abloy mechanical · Assa Abloy Cliq electronic
Installation	No drilling, no welding
Keying	Various brands of locks and keys — keyed-alike available
Security	Anti-removal pins

FEATURES

- Crossbar ties both lock rods — neither door can be worked while locked
- Clevis pivot swings the bar clear when opened
- Anti-removal pins defeat disassembly
- A separate SKU for each barrel option, and for keyed-alike sets

APPLICATIONS

High-security container door locking that ties both lock rods at once; sites with elevated theft risk.

DESCRIPTION

A heavier variant of the handle isolator: a solid steel crossbar ties both lock rods together so neither door can be worked while it is locked. The clevis on the opposite door forms the pivot, swinging clear once the lock is opened to allow access. Anti-removal pins prevent the assembly being dismantled in place. Barrel options and keyed-alike sets each carry their own SKU.

TLA-SEC-LBOX-01

Lock box (weld on)



Weld-on steel lockbox — a heavy-gauge cowl that fully encloses the container padlock against bolt cutters and pry bars while shielding it from the weather; sized for insurance-type padlocks and best fitted in pairs.

TECHNICAL SPECIFICATIONS

Material	Heavy-gauge steel (welded)
Finish / Coating	Painted (post-installation)
Recommended	Fit in pairs — top and bottom of door

FEATURES

- Fully encases the padlock — only the shackle is reachable
- Weather protection: no freezing or rusting of the padlock
- Tack-weld to confirm alignment, then weld out and paint
- Pairs with the insurance-type padlocks on the next page

APPLICATIONS

Container yard and site storage security; high-value goods storage; remote-site container protection.

DESCRIPTION

The two-piece lockbox welds to matching points on the two container doors, encasing the padlock so only the shackle is reachable. Tack-weld to confirm alignment first, then weld out fully and paint. It suits insurance-type padlocks — where the pin and key are on the same side — and for best effect fit two: one at the top of the door and one at the bottom.

TLA-SEC-PLOCK-01 / -KA

Lock box specific padlocks



Insurance-grade armoured padlock — solid forged brass body with case-hardened, chrome-plated steel armour and a 7-pin anti-drill plug, engineered to drop into Twistlock Africa's weld-on lockboxes.

TECHNICAL SPECIFICATIONS

Brand / Model	VIRO 4116 (preferred — purpose-matched to Twistlock Africa lockboxes; other brands available subject to stock)
Body	Solid forged brass
Armour	Case-hardened, tempered steel, copper/nickel/chrome plated — 2.5/3 mm main, 1–1.5 mm side
Cylinder	7-pin anti-drill plug
Dimensions	77 × 62 × 29 mm · 0.69 kg

FEATURES

- Pin and key on the same side — the insurance-padlock pattern lockboxes need
- Case-hardened rotating dead-bolt resists attack
- Keyed-alike sets available for fleets and multi-container sites — separate SKU (-KA)
- VIRO is Twistlock Africa's preferred brand for this application — alternative brands available depending on availability

APPLICATIONS

Maximum-security container door locking inside Twistlock Africa weld-on lockboxes; high-risk storage and transit.

DESCRIPTION

A one-piece forged brass body carries case-hardened, tempered and chrome-plated steel main armour (2.5 mm or 3 mm depending on model) with side armour from 1 mm to 1.5 mm. The case-hardened rotating dead-bolt resists attack, and the 7-pin plug defeats drilling and picking. Sized to drop into the weld-on lockboxes on the preceding page.

TLA-SEC-CLUTCH-01

Handle clutchbox



Steel handle clutchbox — fits over the lock rod handle and, with its integrated padlock, stops the handle being turned and the door being opened.

TECHNICAL SPECIFICATIONS

Material	Hardened steel
Locking	Integrated padlock

FEATURES

- Encloses the lock rod handle — the most-attacked part of the door gear
- Integrated padlock locks the handle in place
- Robust secondary lock, simple to fit

APPLICATIONS

Container door handle security; sites needing secondary locking on the lock rod handle.

DESCRIPTION

The clutchbox is shaped to enclose the lock rod handle, adding a hardened steel barrier around the most-attacked part of the door gear. Its integrated padlock locks the handle in place so the lock rods cannot be rotated. A straightforward, robust secondary lock for door-handle security.

NEW · REV 1

TLA-SEC-LBXL-01

Loose lock box (slip-on)





PRODUCT IN USE

Loose, slip-on steel lock box that sleeves over the container door handle and encloses the padlock shackle. No welding, no drilling: fits hired and customer-owned containers and moves with you.

TECHNICAL SPECIFICATIONS

Material	S355JR steel plate, 4 mm, continuously welded
Dimensions	254 × 152 × 102 mm (H × W × D)
Finish / Coating	Powder-coated, Twistlock blue
Supply options	Box only TLA-SEC-LBXL-01 · Kit with padlock TLA-SEC-LBXL-KIT · Padlock TLA-SEC-PLOCK-LBX

APPLICATIONS

Hired and leased containers where welding is not permitted; site and yard storage; relocatable containers; retrofit security without hot work

DESCRIPTION

Where the weld-on lock box (TLA-SEC-LBOX-01) is fixed permanently to the doors, the loose lock box slides over the vertical lock rod handle and is secured through the box with a padlock, so it can be fitted in seconds and removed without a trace. The enclosed shroud keeps the shackle out of reach of bolt cutters and pry bars and shields the padlock from weather. Fabricated locally by Twistlock Africa from 4 mm S355JR plate, continuously welded and professionally powder-coated in Twistlock blue. Fits the standard ISO lock rod handle, either door. Supplied box-only (TLA-SEC-LBXL-01) or as a kit with padlock (TLA-SEC-LBXL-KIT); keyed-alike sets on request. Fit one per lock rod handle; two per door set where both handles are to be secured.

5

OPERATION 5

Transporting

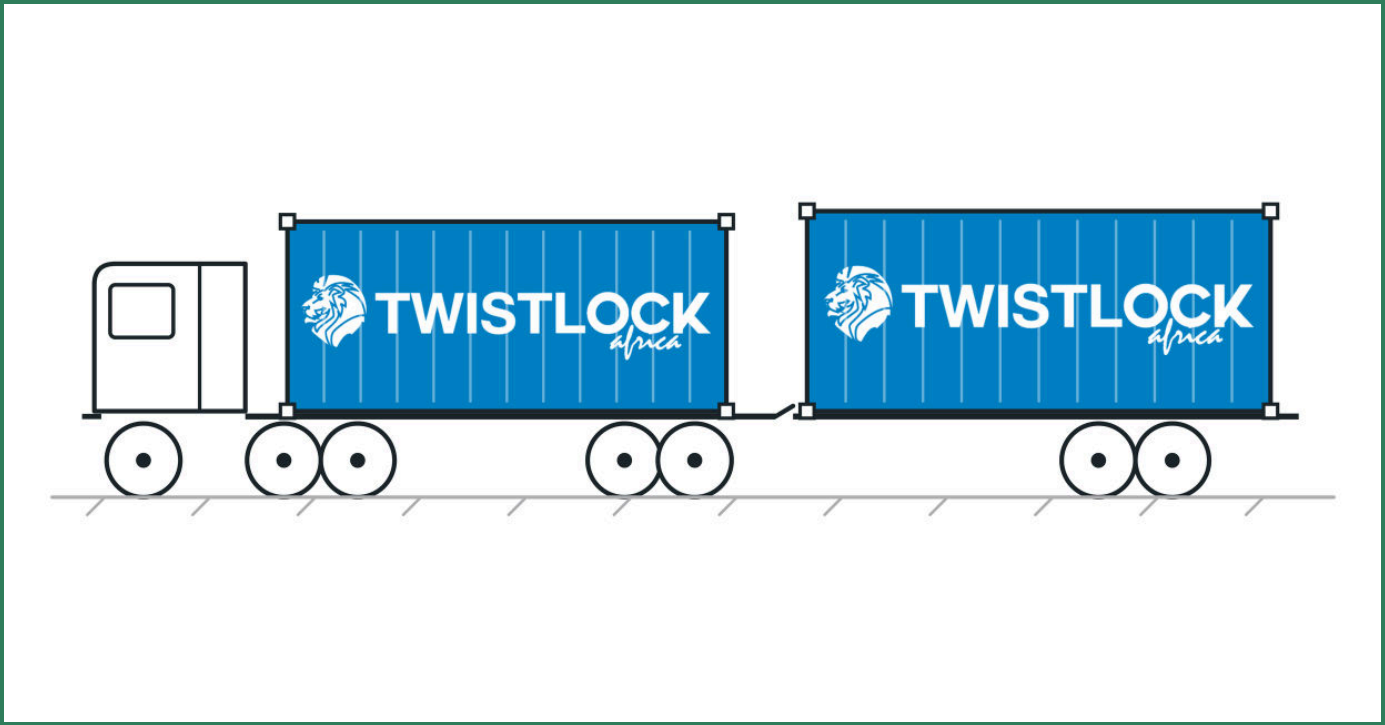

- Trailer twistlock
- European trailer lock

Transporting

Once a container is loaded, it still has to move — by road, on a flatbed or skeletal trailer, coupled to another container, or lowered onto a structure that needs to travel as one unit. This section covers the twistlocks that make that connection: securing a container to the trailer deck beneath it, and joining containers or structures to one another for transport and handling.

These are safety-critical connections — a container that comes loose on the road is a serious hazard — so the units in this section are built around retaining and anti-release features specific to the trailer or coupling application, rather than the general-purpose stacking and lashing hardware covered elsewhere in this catalogue.

CHOOSE THIS SECTION WHEN…

you need to secure a container to a trailer deck, couple two containers together for transport or handling, or attach a structure to a container's corner castings so it can be lowered and locked into place.

ALSO SEE

The **horizontal twistlock** couples two 20 ft containers end-to-end into a single 12 m unit for transport. It is catalogued once, in **Section 1 — Stacking**, rather than repeated here.



LASH SAYS

A stacking twistlock is not a trailer twistlock. They both fit the same corner casting, which is exactly why the wrong one gets used. The trailer unit has to survive road shock and a deck that flexes under it — that is what the retaining and anti-release features are for. Fit the right one, and check it is locked before you pull off.

DID YOU KNOW?

On South African roads the legal envelope is 4.3 m high and 2.6 m wide, with length capped at 12.5 m rigid, 18.5 m articulated and 22.0 m for other combinations.

TRH 11, 8th Edition

TLA-TRN-TRTL-01 (single)

Trailer twistlock



Industry-standard retractable trailer twistlock for the African trucking industry; core retracts into the body when not in use; replaceable core; installs through a deck penetration.

TECHNICAL SPECIFICATIONS

Material	Steel
Load Rating (SWL)	SWL Tension 250 kN · SWL Shear 210 kN
Load Rating (MBL)	MBL Tension 500 kN · MBL Shear 420 kN
Dimensions	150 × 150 mm flange · 127 mm body height · travel 172 mm up / 230 mm down
Standard	ISO 1161

FEATURES

- Core retracts flush into the body — trailer deck stays clear for other loads when not securing a container
- Replaceable core — swap without removing or modifying the twistlock body
- Comes standard with a long handle, customisable to suit
- Installs through a single deck penetration; top plate welded into position
- Double variant available on request — separate SKU

APPLICATIONS

Container securing on flatbed trailers; securing containerised structures (e.g. MCC units) to container top corner castings.

DESCRIPTION

This twistlock is the industry-standard unit widely used in the African trucking industry. Its core retracts into the body so the twistlock does not protrude through the trailer deck when the trailer is used for other purposes, and the core can be replaced — without removing or modifying the twistlock body — should it be damaged. It comes standard with a long handle, customisable to suit. Installation requires a penetration cut into the trailer deck, with the top plate welded into position. Alternatively, these twistlocks can be welded directly onto a structure that is then lowered onto a container: the twistlocks engage the corner castings and the handle is turned to lock them in place. The SKU shown covers the single unit; a double variant is available on request under its own SKU.

TLA-TRN-EUTL-01

UPDATED · REV 1

European trailer lock





PRODUCT IN USE

Heavy-duty European-compliant trailer lock with positive anti-release mechanism preventing accidental unlocking; meets European transport safety requirements.

TECHNICAL SPECIFICATIONS

Material	Steel (welded construction)
Dimensions	150 × 175 mm flange · 247 mm overall height
Weight	15.5 kg
Standard	European trailer transport safety requirements

FEATURES

- Positive anti-release mechanism — the twistlock cannot come loose in transit
- Pulls the container firmly into the trailer deck as it locks
- Built for heavy-duty operation
- Meets European trailer transport safety requirements

APPLICATIONS

Container securing on European-specification trailers; high-safety transport applications.

DESCRIPTION

A heavy-duty trailer lock purpose-built to pull the shipping container firmly into the deck of the trailer as it engages. Positive anti-release safety features meet European transport safety requirements, ensuring the twistlock cannot work loose in transit.

OPERATION 6

Lifting

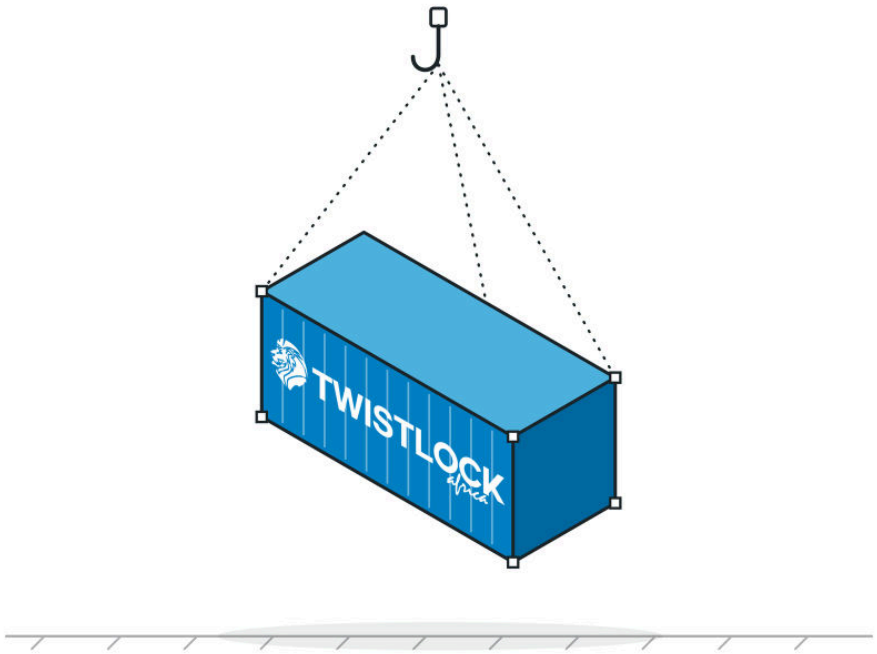

- Corner jack
- Corner jack with trestle
- ConFoot CFU & range (OEM spread)
- Lifting lugs — side entry
- Lifting lugs — top entry
- Lifting frame

Lifting

Sometimes a container needs to come off its wheels or its foundation entirely — for levelling on uneven ground, for maintenance access underneath, or for a crane or hoist to lift it as a single unit. This section covers the corner-mounted jacks, portable leg systems and certified lifting points that make that possible without heavy plant on site.

Two different needs sit side by side here: levelling and support (jacks, ConFoot legs) versus certified lifting (lifting lugs, lifting frames). The load ratings and standards that apply are different for each, so always match the product to the job — a levelling jack is not a lifting point, and a lifting lug is not a permanent support.

CHOOSE THIS SECTION WHEN…

you need to level, support or lift a container off the ground — whether that's jacking a corner for access, setting a container on legs instead of blocks, or rigging a certified lift with a crane or hoist.

TLA-LFT-CJACK-01

Corner jack





FITTED TO THE CORNER CASTING

Container corner jack for levelling or full-container lifting; used with a 10-ton hydraulic jack, lifting each corner up to a maximum of 250 mm. A minimum of two is recommended, used as a pair to lift two adjacent corners.

TECHNICAL SPECIFICATIONS

Material	Graded steel plate — welded assembly
Lift height	Up to a maximum of 250 mm
Load Rating (SWL)	10 tons (standard) / 20 tons (heavy duty)
Finish / Coating	Etching primer + final coat; client colour choice

FEATURES

- Minimum of 2 required (recommended) — used as a pair to lift two adjacent corners
- Set of 4 for a full container lift
- Lifts the corner casting up to a maximum of 250 mm
- Welded assembly
- Bracket removes and stores once the container is levelled

APPLICATIONS

Container levelling at permanent or temporary sites; full container lifting in combination with hydraulic jack; maintenance access.



DESCRIPTION

Designed to lift and level container corners. A minimum of two is recommended, used as a pair to lift two adjacent corners at once — this avoids twisting the container — and a set of four is needed for a full container lift. Used with a 10-ton hydraulic jack, the corner casting can be raised up to a maximum of 250 mm; where the gap is packed with weight-bearing material the procedure can be repeated. The jack is a welded assembly, and the bracket can be removed and stored once the container is levelled.

TLA-LFT-CJTR-01

Corner jack with trestle



Corner jack with integrated locking trestle rod; raises container corners ~200 mm and locks at height so the hydraulic jack can be removed; trestle rod SWL 4 tons per jack.

TECHNICAL SPECIFICATIONS

Material	Steel
Load Rating (SWL)	Locking rod: 4 tons per jack (lifting done with hydraulic jack)

FEATURES

- Locks the container at the raised height — the hydraulic jack can then be removed
- Raises the corner by approximately 200 mm
- Engaging the jacking rod locks the jack at the required height
- Integrated rod rated 4 tons per jack

APPLICATIONS

Container levelling with a permanent height lock; maintenance or installation work requiring sustained container elevation without a jack under load.

DESCRIPTION

A variation on the corner jack that can lock the container at the raised height once it has been jacked up, raising the corner by around 200 mm. Engaging the jacking rod locks the jack at the required height — rated at 4 tons per jack — so the hydraulic jack itself can then be removed while the container stays supported at the desired elevation.

OEM PARTNER

ConFoot

Portable container leg systems — Finnish engineering, distributed in South Africa through INKO 21.



Oy ConFoot Ltd is a Finnish manufacturer, based in Espoo, with a distributor network covering more than 20 countries. Their portable leg systems are designed to lift, support or unload shipping containers without a forklift or crane — patented, lightweight and quick for a single operator to deploy.

The **CFU** heavy-duty lifting leg (next page) is the standout for South African depots and yards: each leg carries its own manually-operated hydraulic bottle jack, so a set of four lifts a container off *any* trailer or chassis — no pneumatic suspension required — and lowers it all the way to the ground in 5–10 minutes with no crane or forklift. ConFoot's other leg systems are shown on the following page.

SUPPLIED BY TWISTLOCK AFRICA

Available through Twistlock Africa on an order-to-supply basis via INKO 21. Not authorised-representative stock — enquire for lead times.

Manufacturer site — full range, specifications and manuals

TLA-LFT-CONFT-CFU20-01

ConFoot CFU 20 — hydraulic lifting leg



ConFoot CFU 20 — four self-contained hydraulic-jack legs lift a container off any trailer or chassis and lower it to the ground in 5–10 minutes, no crane or forklift required; 20-tonne set capacity; frees the truck to leave immediately.

TECHNICAL SPECIFICATIONS

Material	High-grade steel
Load Rating (SWL)	20 t (set of 4)
Dimensions	Height adjustment 0–1 500 mm
Weight	46 kg per leg assembled
Mechanism	Manual hydraulic bottle jack per leg; locks into the ISO corner casting

FEATURES

- Self-contained jack in every leg — any trailer, no pneumatic suspension needed
- Lifts the container clear of the trailer, lowers it to the ground
- No crane, forklift or extra workers — one operator, 5–10 minutes
- Frees the truck to leave immediately once the container is down
- CFU 30 / CFU 45 variants available on enquiry for heavier loads

APPLICATIONS

Trailer-independent container unloading without lifting equipment on site; temporary ground storage; repositioning between trailer and ground.

DESCRIPTION

The CFU is ConFoot's heavy-duty lifting leg: each of the four legs has its own manually-operated hydraulic bottle jack built in, so the set lifts a container clear of the trailer and lowers it to the ground — or the reverse — with no crane, forklift or pneumatic suspension required. Rated to 20 tonnes as a set, the cycle takes 5–10 minutes with a single operator, freeing the truck to leave immediately.

OEM PARTNER

Other ConFoot Products Available

Beyond the CFU, ConFoot's manually-deployed leg family covers general-purpose, framed and loading-dock use cases — available to order through Twistlock Africa via INKO 21.



ConFoot CF

34 t — general-purpose, storage & tank containers

Standard leg for general container support and storage — the base model in the ConFoot range.

View product →



ConFoot CFL

30 t — framed & tank containers

Fits into the frame of tank and framed containers for stable support on non-standard corner castings.

View product →



ConFoot CFP

30 t — loading-dock leg

Secures a container to a loading dock, doors open fully to the side, freeing the delivery trailer for other work.

View product →

FULL RANGE

All ConFoot leg systems share a patented, magnetically-stabilised single-operator fitting method, 24 kg per leg and 1 043–1 448 mm height adjustment. See the complete range, specifications and manuals on the manufacturer's site.

TLA-LFT-LLSE-01

Lifting lugs — side entry







LATERAL LIFTING LUG VARIANT, AND THE LUG IN USE

Side-entry lifting lugs (left- and right-hand) inserted into the bottom corner casting side aperture for safe container lifting; SWL 12.5 tons per lug; certified lifting equipment — use in sets of 4.

TECHNICAL SPECIFICATIONS

Material	Cast steel
Load Rating (SWL)	12.5 tons per lug
Weight	4 kg per lug; lifting hole diameter 70 mm
Finish / Coating	Powder-coated yellow
Lateral variant	Type-approved lateral lifting lug — SWL 10 t at 36° sling angle / 8 t at 50° (DNV type approval TAS00003Y2)

FEATURES

- Well-established industry-standard lifting method
- Inserts into the side hole of the bottom corner casting
- Set of 4 required: 2 left-hand + 2 right-hand, pointed towards each other when correctly installed
- Certified lifting equipment — must not be dropped on hard surfaces
- Lateral lifting lug variant available with independent third-party type approval

APPLICATIONS

Container lifting with cranes using bottom corner castings; set of 4 (2 LH + 2 RH) required; shackle required to connect to lashing equipment.



DESCRIPTION

A well-established industry-standard fitting that inserts into the side hole of the bottom corner casting — two left-hand and two right-hand lugs per set, pointed towards each other when correctly installed. As certified lifting equipment it must not be dropped on hard surfaces and should be used only for its intended container-lifting purpose; a shackle connects it to the lashing or lifting equipment above. A second, lateral lifting lug variant carries independent third-party type approval rating it to 10 t SWL at a 36° sling angle or 8 t at 50°.

TLA-LFT-LLTE-01

Lifting lugs — top entry





PRODUCT IN USE

Top-entry lifting lugs for crane lifting via top corner castings; safety slider prevents accidental removal in use; SWL 56 tons for a set of 4; certified lifting equipment — use in pairs of 2 or 4.

TECHNICAL SPECIFICATIONS

Material	Cast steel
Load Rating (SWL)	56 tons for a set of 4 (rated as a set, not per lug)
Finish / Coating	Powder-coated yellow

FEATURES

- Inserts into the corner casting and twists to lock
- Black safety slider drops into place to prevent removal in use
- To remove: lift slider, twist 90°, pull out
- Certified lifting equipment — use only in pairs of 2 or 4
- 56-tonne rating applies to the full set of 4, not to a single lug

APPLICATIONS

Container lifting with cranes via top corner castings; used with shackle and chain/sling lashing equipment; pairs of 2 or 4.

DESCRIPTION

Inserts into the top corner casting and twists to lock, with a black safety slider dropping into place to prevent accidental removal while in use — lift the slider, twist 90° and pull out to remove. As certified lifting equipment it must not be dropped and should be used only for container lifting, always in pairs of two or four with the appropriate shackle and chain or sling. The 56-tonne rating is for a complete set of four lugs working together, not a single unit.

TLA-LFT-FRAME-01

Lifting frame

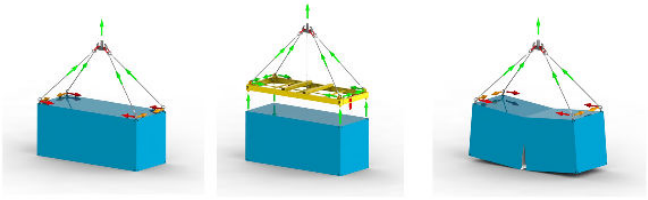

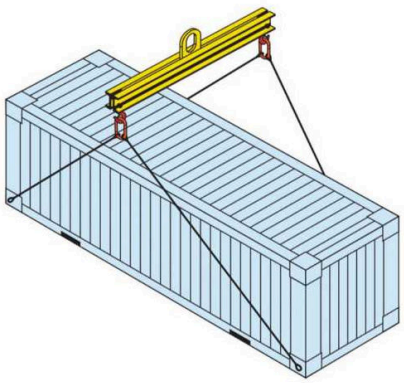

Container lifting frame for stable single-hook crane or overhead hoist lifts — attaches to all four ISO 1161 top corner castings and distributes load evenly, preventing racking stress and enabling safe lifting with a single hook.

TECHNICAL SPECIFICATIONS

Material	Structural steel, S355JR
Load Rating (SWL)	Rated at order — standard configurations 30 tonnes total
Finish / Coating	Hot-dip galvanised
Design standard	SANS 1594; ASME B30.20 (below-the-hook); ISO 1161 interface
Certification	Designed per application by a certified vendor; proof-load tested by an authorised authority, certificate per unit

FEATURES

- Distributes the lift load evenly across all four top corner castings
- Prevents racking stress and corner-casting damage from an uneven single-hook rig
- Available for 6 m (20 ft) and 12 m (40 ft) containers — or one unit for both, chains shortened to suit

APPLICATIONS

Crane lifts in depots and yards without a spreader bar; overhead hoist lifts in workshops and buildings; single-hook lifting where a telescoping spreader bar is impractical.



DESCRIPTION

Also known as a spreader frame or lifting beam, the lifting frame lets a single crane hook lift a container safely by distributing the load evenly across all four top corner castings via integrated ISO-compliant lifting lugs. Rigging a container from a single hook without one can rack the structure, damage the corner castings, or make the lift unstable. Available for 6 m (20 ft) and 12 m (40 ft) containers, and as a single unit that serves both. Every frame is designed for its application by a certified vendor and proof-load tested by an authorised testing authority before delivery; the certificate is issued for that specific unit and supplied with it. Confirm the container's gross weight when ordering.

OPERATION 7

Fabricating

Every component required to fabricate or repair a shipping container. The labelled container and door diagrams in this section identify them by name.



- Corner castings
- Panels (side / front / roof)
- Beams (cross members, side rails)
- Beams — door sill
- Beams — door headers
- Columns (corner posts)
- Complete doors
- Door hardware
- Door seals

Fabrication & Repair

A shipping container is a weld-repairable steel structure — corroded panels, damaged corner posts and worn door hardware don't need to end its working life. This section covers the structural and cosmetic components used to repair, refurbish or rebuild ISO containers: corner castings, wall and roof panels, structural beams and corner posts, complete replacement doors, and door hardware and seals.

Sourced via SpeedSpares, Twistlock Africa's primary supplier for these lines, profiled to match standard ISO container construction. Most items here are supplied as raw components for a qualified fabricator/ welder to fit — this is repair and new-build stock, not a plug-and-play accessory range.

CHOOSE THIS SECTION WHEN…

you're repairing, refurbishing or fabricating a container from steel and door components, not adding an accessory to an intact one.

Container components

These two drawings name the components of a standard container. The doors are drawn separately because they carry the largest component count.

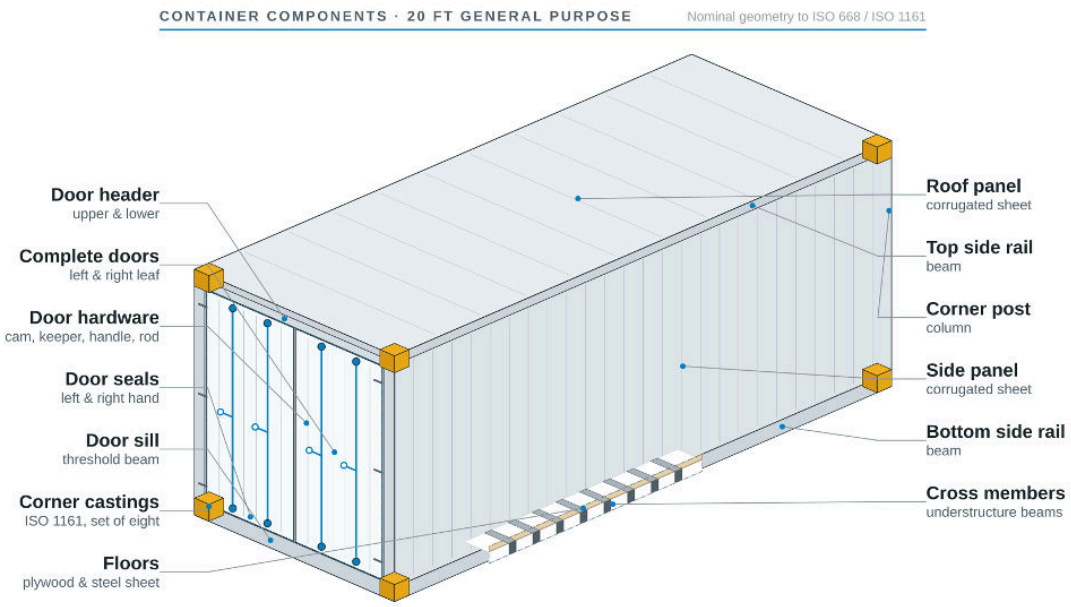

Container components, 20 ft general purpose. Nominal geometry to ISO 668 / ISO 1161.

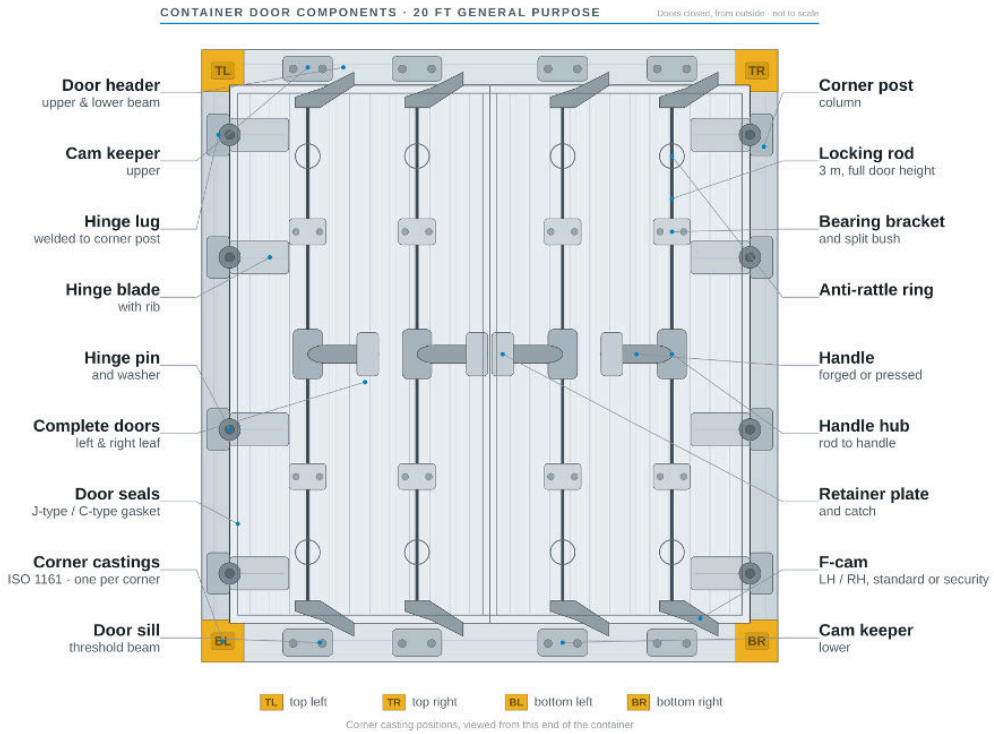

Door components, doors closed, viewed from outside. Corner castings are tagged by position at this end of the container. Arrangement drawing, not to scale.

TLA-FAB-CC-01

Corner castings

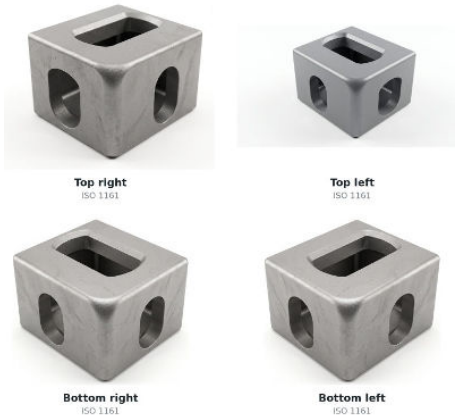



Replacement ISO corner castings for shipping container repair; manufactured from low-temperature steel (-40°C rated); set of 8 blocks (2× bottom right, 2× bottom left, 2× top right, 2× top left).

TECHNICAL SPECIFICATIONS

Material	SCW480 / low-temperature steel (-40°C working temperature). Also available in aluminium and stainless steel
Dimensions	178 × 162 × 118 mm (per casting)
Mass	≈ 10.5 – 11 kg per casting (indicative — see note)
Standard	ISO 1161
Supply	Set of 8 (2× bottom right, 2× bottom left, 2× top right, 2× top left)

FEATURES

- World-standard ISO 1161 components forming the basis of all intermodal container transport
- Top and bottom castings are interchangeable (same size and openings)
- ISO 1161 specifies geometry and tolerance, not mass — mass varies with the casting pattern and wall thickness within tolerance
- Full engineering drawings available on request
- Fundamental structural components — every replacement enables corner-to-corner connection and lifting with standard equipment

APPLICATIONS

Container fabrication and repair; replacement of damaged or corroded corner castings.

DESCRIPTION

The corner casting is the fitting every other piece of container handling and securing equipment engages — twistlocks, lifting lugs, lashing points and stacking all connect through it. Twistlock Africa supplies replacement sets in low-temperature-rated steel (-40°C) to the standard ISO 1161 geometry, as a set of eight covering all four corner positions. Top and bottom castings share the same size and opening, keeping stock simple.

TLA-FAB-PAN-*

Panels (side / front / roof)



Side wall
corrugated, GP and HC heights



Front wall
corrugated, GP and HC heights



Roof panel
4 corrugation



Roof panel
5 corrugation

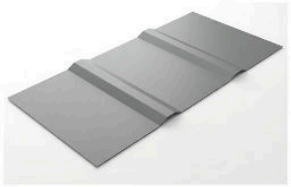

Door panel
2 corrugation

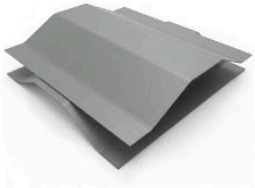

Patch panel
localised repair

Replacement corten steel side wall, front wall and roof panels for repairing corroded or impact-damaged containers, profiled to match standard ISO container corrugation.

TECHNICAL SPECIFICATIONS

Material	Corten (weathering) steel, 1.6 mm or 2.0 mm gauge (variant dependent)
Side Wall	GP · 1.6 mm · 1116 × 2400 mm · 35 kg GP · 2.0 mm · 1116 × 2400 mm · 43.5 kg HC · 1.6 mm · 1116 × 2700 mm · 39.2 kg HC · 2.0 mm · 1116 × 2700 mm · 49 kg
Front Wall	GP · 2.0 mm · 1024 × 2400 mm · 45.7 kg HC · 2.0 mm · 1024 × 2700 mm · 51.5 kg
Roof Panel	2.0 mm · 1045 × 2356 mm · 40.5 kg
Standard	ISO 1496-1

FEATURES

- Available in General Purpose (GP, 2.4m) and High Cube (HC, 2.7m) heights
- Smaller patch panels available for localised corrosion or puncture repairs
- Corrugation profile matches original container construction
- Front panel patch (260 × 2700 mm) available for door-end localised repair

APPLICATIONS

Replacing corroded/damaged side, front or roof panels during refurbishment; patch repairs for localised rust-through or impact damage; new-build fabrication.

DESCRIPTION

Profiled to match standard ISO container corrugation, these corten steel panels replace corroded or impact-damaged cladding without a full container rebuild. Side wall, front wall and roof panel variants are available in General Purpose and High Cube heights, and smaller patch panels handle localised corrosion or puncture damage without replacing an entire panel. Manufactured from corten (weathering) steel matching original container construction.

TLA-FAB-BM-*

Beams (cross members, side rails)



Cross member
equal and unequal leg



Bottom side rail
full-length



Bottom front rail
front-end

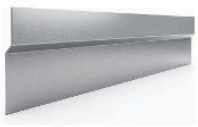

Top end rail
front and door end



Top side rail
square tube profile



Top side rail
flat steel profile

Replacement corten steel structural beams — cross members, bottom side rails and top side rails — for container floor and frame repairs.

TECHNICAL SPECIFICATIONS

Material	Corten (weathering) steel, 3.0–4.5 mm gauge (profile dependent)
Cross Member	45 mm profile · 4.0 × 45 × 122 × 45 × 2400 mm · 14.1 kg 75 mm profile · 4.0 × 45 × 122 × 75 × 2400 mm · 14.1 kg
Bottom Side Rail	C-type · 4.5 × 50 × 162 × 30 × 5702 mm · 43.45 kg Z-type · 4.5 × 50 × 155 × 30 × 5702 mm · 47.5 kg
Top Side Rail	3.0 × 60 × 60 × 5702 mm · 29.5 kg
Load Rating	Not rated on its own. Correctly installed as a like-for-like replacement, the container's rated capacity is maintained
Standard	ISO 1496-1, ISO 668

FEATURES

- Cross members are floor support beams in 45 mm and 75 mm profile depths
- Bottom side rails are full-length (5 702 mm) longitudinal floor frame members, C-type or Z-type
- Top side rails are full-length roof-edge longitudinal members
- Supplied in standard lengths for 20 ft and 40 ft repairs — minor trimming may be required

APPLICATIONS

Replacing corroded/buckled floor cross members; replacing damaged bottom or top side rails during structural repairs; new-build fabrication.

DESCRIPTION

Cross members are the floor support beams spanning the container width beneath the floor sheet, available in 45 mm and 75 mm profile depths. Bottom side rails are full-length longitudinal floor frame members in C-type and Z-type profiles, and top side rails are the corresponding full-length roof-edge members. All are supplied in corten steel and cut to length for 20ft and 40ft repair work.

TLA-FAB-DSL-01

Beams — door sill



Replacement corten steel door sill — the lower cross member at the container door opening that supports the door hinges and takes forklift/foot traffic at the threshold.

TECHNICAL SPECIFICATIONS

Material	Corten (weathering) steel, 4.5 mm
Dimensions	2400 × 158 × 150 mm
Weight	27.5 kg
Load Rating	Not rated as a loose component. Installed correctly as a like-for-like replacement, the container's original rated capacity is maintained
Standard	ISO 1496-1

FEATURES

- Profiled to match OEM door sill geometry
- Provides the load path between the bottom side rails across the door opening
- Heavy-gauge steel for resistance to forklift tyre wear and repeated threshold loading

APPLICATIONS

Replacing a corroded or impact-damaged door sill on a 20ft/40ft GP container; new-build door-end fabrication.

DESCRIPTION

The door sill is the lower cross member at the container door opening — it supports the door hinges and carries repeated forklift and foot traffic at the threshold, making it one of the more common wear points on an older container. Twistlock Africa's replacement is profiled to OEM geometry in heavy-gauge (4.5 mm) corten steel, restoring the load path between the bottom side rails across the door opening.

TLA-FAB-DHU-01 / TLA-FAB-DHL-01

Beams — door headers (upper & lower)



Upper header
spans the door opening



Lower header
carries the door gear

Replacement corten steel door headers — upper header spans the top of the door opening as part of the front-end frame; lower header reinforces the opening and mounts the upper door seal retainer.

TECHNICAL SPECIFICATIONS

Upper Header	Corten 3.0 mm · 2400 × 394 × 3 mm · 23 kg
Lower Header	Corten 4.0 mm · 2400 × 137 × 113 mm · 26 kg
Standard	ISO 1496-1

FEATURES

- Upper header ties the top corner castings and rear corner posts together
- Upper header is profiled to accept door hinge brackets and roof panel fixings
- Lower header provides the fixing profile for the upper door seal/ gasket retainer
- Supplied as separate upper and lower items — order together for a full header repair

APPLICATIONS

Replacing a corroded/damaged door header on the rear door-end frame; new-build door-end fabrication.

DESCRIPTION

The upper door header spans the top of the door opening, tying the top corner castings and rear corner posts together and accepting the door hinge brackets and roof panel fixings. The lower header sits beneath it, reinforcing the opening and carrying the fixing profile for the upper door seal retainer. Both are supplied in corten steel profiled to OEM geometry.

TLA-FAB-COL-*

Columns (corner posts)



Front corner post
GP and HC



Rear corner post
outer section



Rear corner post
inner section

Replacement corten steel corner posts — the vertical structural columns at each corner of the container that carry stacking and racking loads via the corner castings.

TECHNICAL SPECIFICATIONS

Material	Corten steel, 6 mm (front and rear outer) / 12 mm (rear inner)
Front Corner Post	GP · 6.0 × 209 × 225 × 2400 mm · 59.5 kg HC · 6.0 × 209 × 225 × 2700 mm · 72.9 kg
Rear Corner Post — Outer	GP · 6.0 × 50 × 40 × 232 × 2400 mm · 38.1 kg HC · 6.0 × 50 × 40 × 232 × 2700 mm · 42.5 kg
Rear Corner Post — Inner	GP · 12 × 113 × 40 × 2353 mm · 32.7 kg HC · 12 × 113 × 40 × 2657 mm · 37.0 kg
Load Rating	Not rated as a loose component. Built into a complete corner assembly and correctly installed, the container carries up to eight fully loaded containers stacked above it
Standard	ISO 1496-1, ISO 1161

FEATURES

- Front Corner Post (left/right pair) and Rear Corner Post (Outer + Inner sections) available
- Available in GP (2.4m) and HC (2.7m) heights
- Forms the primary load path between top and bottom corner castings
- A common forklift/handling damage point

APPLICATIONS

Replacing a corroded or impact-damaged corner post; new-build fabrication.

DESCRIPTION

The corner post is the vertical structural column at each corner of the container, forming the primary load path between the top and bottom corner castings and carrying the container's stacking and racking loads. It's also one of the most common forklift and handling damage points. Twistlock Africa supplies front corner posts as a left/right pair, and rear corner posts as separate outer and inner sections, in both GP and HC heights.

TLA-FAB-DOOR-01

Complete doors



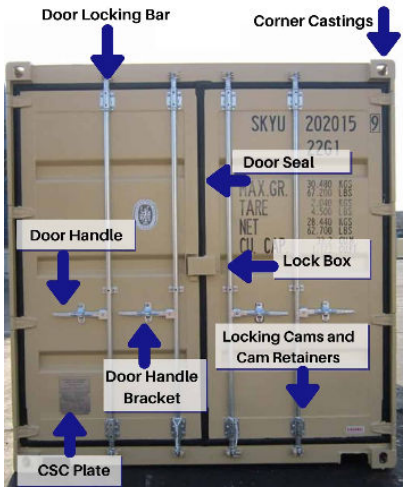

SUPPLIED AS A MATCHED LEFT- AND RIGHT-HAND PAIR

Complete replacement door leaf assembly for ISO container repair — corrugated corten steel door with hardware fitted; specify left-hand (LH) or right-hand (RH) when ordering.

TECHNICAL SPECIFICATIONS

Fitment	The same door suits 20 ft and 40 ft containers; two heights — General Purpose and High Cube
Material	Corten steel door leaf with fitted hardware
Door assembly	Welded door leaf, typically two locking rod assemblies, four hinges and rubber seals

FEATURES

- Corrugated corten steel door leaf, hinge and lock hardware pre-fitted
- Ordered as left-hand (LH) or right-hand (RH)
- Rubber seals fitted with retainers

APPLICATIONS

Replacing a complete door leaf that is too damaged for panel-level repair; door-end rebuilds.

DESCRIPTION

Where a door leaf is too damaged for a panel or hardware-level repair, a complete replacement door assembly is the alternative — a corrugated corten steel leaf with hinge and locking hardware already fitted, ordered as left-hand or right-hand to match the container. The same door suits 20 ft and 40 ft containers and is available in General Purpose and High Cube heights. A standard assembly is the welded door leaf, typically two locking rod assemblies, four hinges and rubber seals.

TLA-FAB-DRH-* (26 SKUs)

Door hardware



Replacement door hinge and locking hardware for ISO container doors — hinges, cam/keeper sets, handles and locking bars supplied individually for targeted repairs. 26 individual SKUs, confirmed by Ralph — no bundled kit.

TECHNICAL SPECIFICATIONS

Material	Forged/pressed steel; stainless steel (SUS304) for bushes, rivets and small fasteners
Locking	F-Cam & Keeper (LH/RH, standard/ security) · bearing brackets · split bushes · 3m locking rod · anti-rattle rings
Handles	Forged/pressed handle · retainer plates & catches · handle hub
Hinges	Blade (w/ rib) · pin · washer (SS/brass) · lug · SUS304 bush & rivet
Standard	ISO 1496-1 (door securing)

FEATURES

- Full hinge assembly components (blade, pin, washer, lug)
- Complete cam/keeper locking sets — LH and RH, including security variants
- Forged and pressed door handles, retainer plates/catches and handle hubs
- 3m locking rod/bar for full-height door securing

APPLICATIONS

Replacing worn or seized door hinges and pins; restoring door locking function (cam, keeper, handle, locking bar); upgrading to security cam/keeper variants for high-value cargo.

DESCRIPTION

A door's locking and hinge hardware wears and seizes long before the door leaf itself needs replacing, and Twistlock Africa stocks every component individually rather than forcing a full-assembly purchase. The range covers the complete hinge assembly, full cam/keeper locking sets in standard and security variants, forged or pressed handles with retainer hardware, and the 3m locking rod/bar that ties the full door height together — 26 SKUs, individually sold, no bundled kit.

TLA-FAB-SEAL-*

Door seals





Gasket profile

J-type, 2.5 m length

COMPLETE GASKET SET — LEFT- AND RIGHT-HAND DOOR

Replacement rubber door seals for ISO container doors, restoring weatherproofing on worn or perished seals. Supplied in 2.5 m and 30 m rolls, with rubber adhesive available.

TECHNICAL SPECIFICATIONS

Material	EPDM rubber seal
J-Type Seal	D26-01A/B · 2.5 m length
C-Type Seal	D26-02A/B/C/D/E · 2.5 m length
Supply	2.5 m and 30 m rolls · rubber adhesive available
Standard	ISO 1496-1 (weatherproofing)

FEATURES

- J-Type and C-Type profile seals matching original door seal profiles
- Supplied in 2.5 m and 30 m rolls — 2.5 m is what one door leaf takes
- Rubber adhesive available for bonding the seal into the door channel

APPLICATIONS

Replacing perished or torn door seals to restore weatherproofing; refurbishing doors as part of a wider repaint/repair.

DESCRIPTION

EPDM rubber door seals in J-Type and C-Type profiles, matching original container door seal geometry and supplied in 2.5 m and 30 m rolls, so a single door repair and a full container refit are both catered for. 2.5 m is what one door leaf takes. Rubber adhesive is available for bonding the seal into its channel.

8

OPERATION 8

Attaching

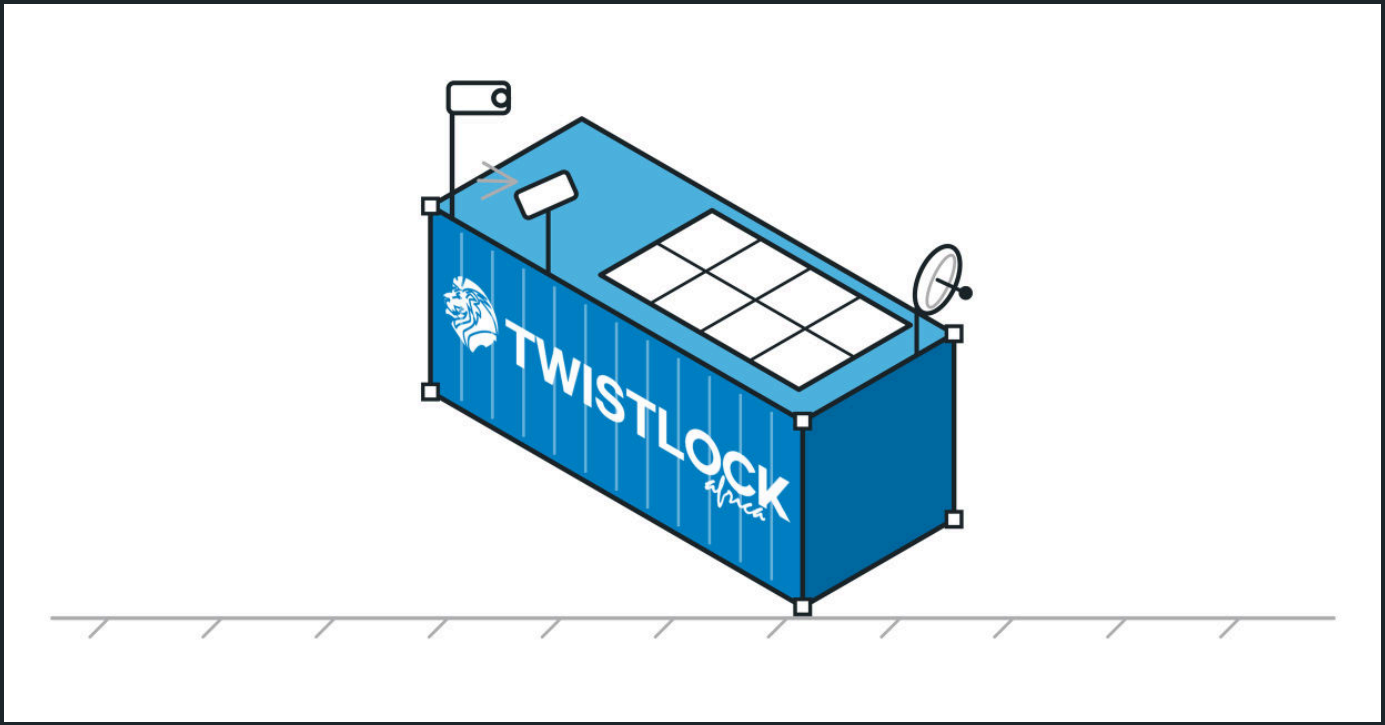

- Domino clamps
- Horizontal twistlock with end plate
- Horizontal twistlock with shackle
- Side bracket
- Top corner casting mounting bracket

Attaching

A shipping container's corner castings aren't just for stacking and lifting — they're also the strongest, most standardised attachment points on the whole structure. This section covers hardware that clamps, bolts or locks onto those castings to carry masts, antennas, solar panels, walkways, lashing points and structural steelwork, without drilling or welding into the container itself.

Because these fittings often carry loads other than the container's own weight — wind on a mast, tension on a lashing point, a structural connection to a building — match the fitting's rated capacity to the actual load, and get an engineer's sign-off for any permanent or structural installation.

CHOOSE THIS SECTION WHEN…

you need to bolt, clamp or lock equipment, structures or lashing points onto a container's corner castings without modifying the container.

DID YOU KNOW?

A container proof-tested to carry eight loaded containers above it is tested for just 300 kg on its roof, spread over 600 × 300 mm. Check before you mount anything up there.

ISO 1496-1, Test No. 7 — Roof

TLA-ATT-DOM-01

Domino clamps



Quick-connect mounting clamps that lock into any ISO corner casting using a single 10 mm hex key, presenting four M12 tapped mounting holes for attaching accessories, structures or equipment — no welding, no drilling, fully reusable.

TECHNICAL SPECIFICATIONS

Fixing	Single M12 hex-key tightened bolt; 10 mm hex key
Mounting Holes	4 × M12 tapped holes on the clamp face
Corner Casting Fit	Shield hole or stadium hole (not the top hole); ISO 1161
Origin	Domino Clamps — Made in Britain

FEATURES

- Locks to the corner casting with a single tool — no welding or drilling
- 4 × M12 tapped mounting holes once installed
- Removable and reusable — leaves no damage to the container
- Attaches almost anything to any of the 8 corner castings on a container

APPLICATIONS

CCTV and floodlight masts, signage, flags, solar panels, satellite dishes, comms/antennas, awnings, cable routing, roofing and cladding rails, scaffolding and tube clamps, walkways, temporary steel/timber structures and fencing.

DESCRIPTION

Domino Clamps is a UK-made, OEM-branded quick-connect clamp that bolts into any ISO corner casting with a single 10 mm hex key — no welding or drilling. Once tightened, it presents four M12 tapped mounting holes on its face, giving a direct bolted point for almost anything: CCTV and floodlight masts, solar panels, antennas, scaffolding, temporary structures or fencing. Because it clamps rather than welds, it can be removed later leaving the container undamaged, and reused elsewhere.

TLA-ATT-DOM-01

Domino clamps — Mounting Detail





Mounting-face detail of the Domino Clamp — the four M12 tapped holes and clamp jaw that engage the corner casting's shield or stadium hole, including when a twistlock is already occupying the corner.

TECHNICAL SPECIFICATIONS

Working Load — Shield Hole	1100–2000 kg, direction-dependent (OEM data)
Working Load — Stadium Hole	1100–2000 kg, direction-dependent (OEM data)
Coexistence	Can be used in the shield and/or stadium holes even when a twistlock already occupies the corner casting

FEATURES

- Engages the shield hole, the stadium hole, or both simultaneously for extra fixing points
- Coexists with a twistlock already locked into the same corner casting
- Cannot be used in the top hole of the corner casting
- Four M12 tapped holes accept standard bolts for the mounted accessory or bracket

APPLICATIONS

Scaffolding and tube clamp structures; engineered steel and timber structures bolted directly to the clamp; 42 mm tube mounts for Heras-type fencing; lighting conductors and cladding rails.

DESCRIPTION

The clamp jaw locates in the corner casting's shield hole or stadium hole — not the top hole — and can occupy both simultaneously for a stronger multi-point fixing, even when a twistlock is already engaged in the same corner. OEM working-load data rates each hole at 1100–2000 kg depending on load direction. The four M12 tapped holes on the mounting face accept bolts directly, letting engineered steel or timber structures, tube-clamp scaffolding, or fencing bolt straight to the container corner.

TLA-ATT-HTLEP-01

Horizontal twistlock with end plate



Horizontal twistlock with adapter/end plate for connecting accessories and structures to the ISO corner casting side aperture; SWL 12T tension; 4 tapped holes on plate.

TECHNICAL SPECIFICATIONS

Material	Forged steel; self-coloured finish
Load Rating (SWL)	SWL 12 t tension; capacity 24 t tension / 34 t shear / 20.8 t compression
Weight	9.1 kg
Standard	ISO 1161

FEATURES

- 4 tapped holes on the adapter plate for direct bolted and welded structural connection
- Forged steel construction rated to 24 t tension / 34 t shear
- Compatible with all ISO-type shipping containers

APPLICATIONS

Attaching walkways, platforms, solar structures and equipment to container side corner casting apertures.

DESCRIPTION

Engages the ISO corner casting side aperture like a standard horizontal twistlock, but terminates in a flat adapter plate with four tapped holes instead of a second twistlock end — giving a direct structural connection point — bolted and welded — for walkways, platforms, solar mounting structures and other equipment.

TLA-ATT-HTLSH-01

Horizontal twistlock with shackle



Horizontal twistlock with articulating D-ring/shackle for connecting lifting chains or slings to the ISO corner casting side aperture; SWL 12T tension; HDG with olive green top coat.

TECHNICAL SPECIFICATIONS

Material	Forged steel
Load Rating (SWL)	SWL 12 t tension; capacity 27 t tension / 8.3 t shear / 20.8 t compression
Weight	9.07 kg
Finish / Coating	Hot-dip galvanised + olive green top coat
Standard	ISO 1161

FEATURES

- Articulating D-ring/shackle end for chains and slings
- Engages the ISO corner casting side aperture directly
- Compatible with all ISO-type shipping containers

APPLICATIONS

Connecting crane hooks, chains and fabric slings to container side apertures; lifting and lashing applications.

DESCRIPTION

Combines a standard horizontal twistlock body with an articulating D-ring/shackle end, giving a rated connection point for chains, slings or crane hooks directly off a container's side corner casting aperture. Forged steel, hot-dip galvanised with an olive green top coat.

TLA-ATT-SBR-01

Side bracket





INSTALLED ON A CONTAINER CORNER CASTING

Threaded lug and angled bracket system for mounting accessories (cameras, antennas, conduit, solar panels) to any of the 8 container corner castings; no welding required.

TECHNICAL SPECIFICATIONS

Material	Steel — threaded lug and angled bracket
Mounting Holes	2 × 25 mm diameter on the bracket face
Fixing	Threaded lug engages the corner casting aperture — no welding or drilling
Corner Casting Fit	Any of the eight ISO 1161 corner castings
Load Rating	Confirmed per application — depends on the mounted equipment and its offset

FEATURES

- Two-piece set: threaded lug and angled bracket
- 2 × 25 mm diameter holes on the bracket for versatile attachment
- Can be modified to suit almost any mounting application
- No welding or drilling into the container required

APPLICATIONS

Mounting security cameras, antennas, conduit, aerials and solar panels to container corner castings without drilling or welding.

DESCRIPTION

A two-piece threaded lug and angled bracket set that mounts to any of a container's eight corner castings without welding or drilling. The bracket carries two 25 mm holes for versatile attachment and can be modified to suit almost any application — security cameras, antennas, aerials, solar panels, or conduit runs on mining camps and powered sites.

TLA-ATT-TCMB-01

Top corner casting mounting bracket





IN USE — SOLAR AREA-LIGHT MAST

Steel mounting brackets that engage the top corner casting aperture without drilling or welding, providing a threaded socket for masts, poles, antennas, security cameras and conduit runs on shipping containers; two configurations available.

TECHNICAL SPECIFICATIONS

Material	Mild steel plate (6 mm min.), welded construction
Finish / Coating	Black powder-coat (standard); other finishes on request
Standard	ISO 1161 corner casting interface
Load Rating	Confirmed per application — depends on the mounted equipment and its offset

FEATURES

- Configuration 9.1 — Pole/mast mount: 1½" NPT female coupling accepts any standard threaded pipe or conduit; single-bolt tightening; under 5-minute install
- Configuration 9.2 — Platform/rail mount: low-profile bracket seats over the corner casting aperture, locks without drilling, accepts standard rail or platform attachments
- Fits any standard ISO 20 ft or 40 ft container — no drilling or welding

APPLICATIONS

Security camera masts; solar panel and solar-light mounting poles; antenna and aerial bases; conduit routing; flag and signage poles on container structures.

DESCRIPTION

Uses the existing ISO 1161 top corner casting oval aperture to create a secure, removable mounting point with no drilling or welding. The 9.1 pole/mast configuration is a welded 6 mm steel body with an integrated 1½" NPT coupling for a custom-length mast or pole, tightened with a single bolt in under five minutes. The 9.2 platform/rail configuration is a low-profile bracket that seats over the aperture and accepts standard rail or platform attachments. Both fit any standard ISO 20 ft or 40 ft container. A mast extending past the container edge loads the bracket eccentrically, and the moment grows with mast length and wind area — so capacity is confirmed per application rather than quoted as one figure.

9

OPERATION 9

Lashing

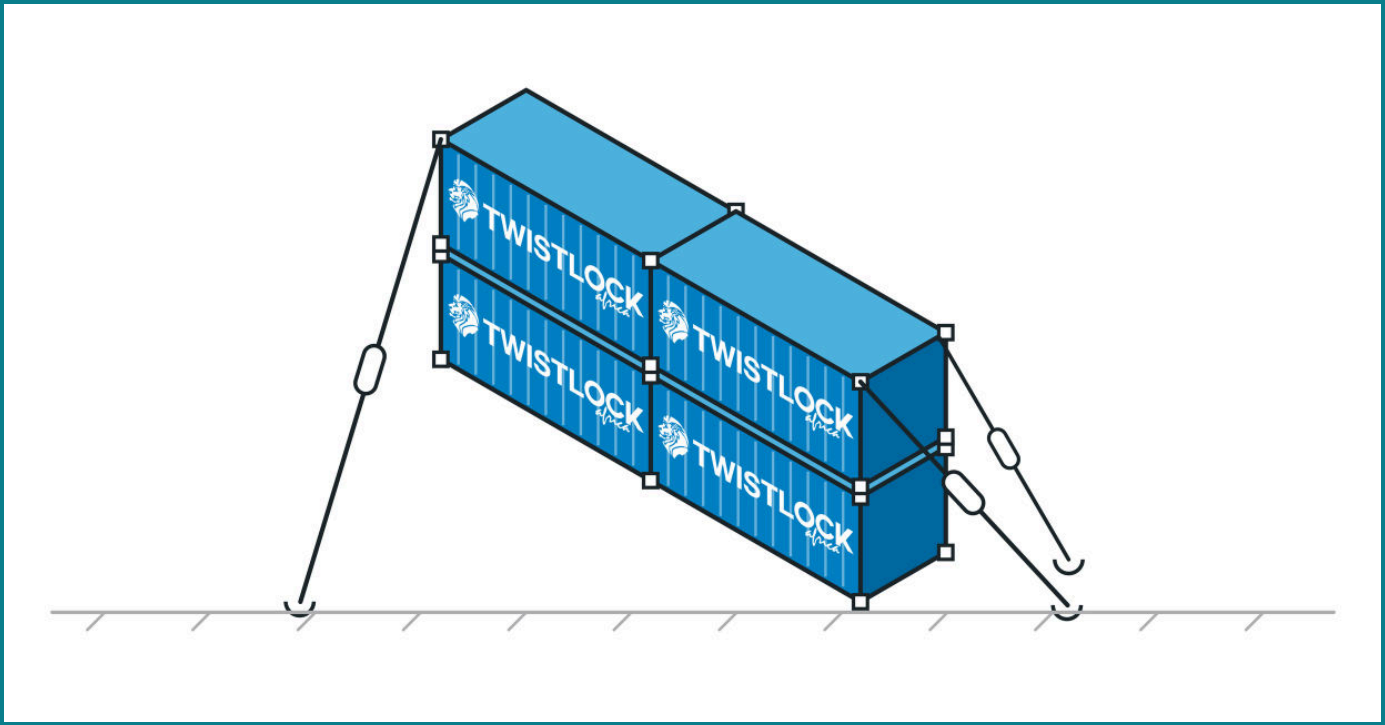

- Midlock — automatic fixing cone
- Operating rods
- Turnbuckles
- Lashing bars
- Extension bars & hook

Lashing Equipment

Securing containers for sea and rail transport demands certified, classification-approved hardware. This section covers the lashing gear that belongs to the vessel rather than to the box — the midlock, turnbuckles, lashing and extension bars, operating rods and the tools that go with them, rated to ISO 3874 and the IMO CSS Code.

Reading the load figures. Minimum Breaking Load (MBL) is the load at which the fitting is proven to fail. Safe Working Load (SWL) is what may be applied in service. Where both are published for a fitting, both are shown, together with the safety factor between them — the twistlock range runs at a factor of 2.0. Never specify to a breaking load.

Vessel securing arrangements remain subject to classification-society approval, and the vessel securing manual governs.

CHOOSE THIS SECTION WHEN…

you need to restrain stacked containers on a vessel or rail wagon in transit.

ALSO SEE

Every product is catalogued once, in the operation it performs. The fittings a lashing arrangement also relies on are therefore found here:

Section 1 — Stacking: manual, semi-automatic and fully automatic twistlocks · stacking cones · bridge clamp
Section 2 — Anchoring: dovetail twistlocks and slippers · deck sockets, raised and flush · turnfoot D-ring · breech twistlock and base
Section 5 — Transporting: trailer twistlocks
Section 8 — Attaching: weld-on and bolt-on lashing points



LASH SAYS

A cone stops a stack sliding. A twistlock stops it lifting. If there is any uplift in the arrangement at all, that is not a cone job — and the sea always finds the uplift.

TLA-LSH-MIDL-01

Midlock — automatic fixing cone

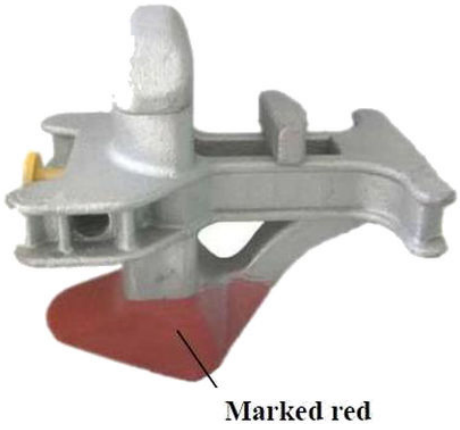

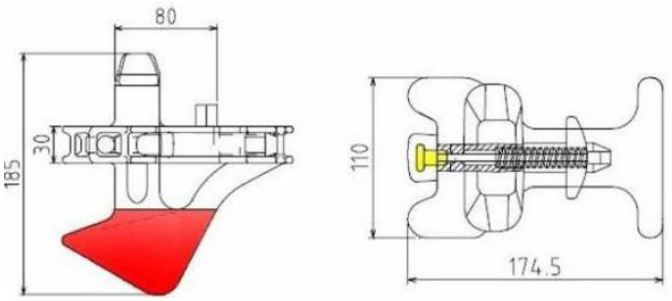

DIMENSIONED ARRANGEMENT

Automatic fixing cone that locks the corner castings of two containers stowed side by side, closing the gap between stacks so a bay behaves as one block under a rolling sea.

TECHNICAL SPECIFICATIONS

ISO code	BD-K2
Min. Breaking Load	500 kN tension · 420 kN shear · 2 000 kN compression
Safe Working Load	250 kN tension · 210 kN shear (SF 2.0)
Weight	6.3 kg
Standard	ISO 1161 · ISO 3874

FEATURES

- Automatic fixing — engages as the container lands, no operator at the stack
- Locks adjacent stacks together across the gap between bays
- Same 250/210 kN rating as the semi-automatic twistlock range
- Classification-society approved — GL, BV and CCS

APPLICATIONS

Side-by-side container stowage on vessel decks and in holds; rail wagon stowage where adjacent stacks must act together.

DESCRIPTION

The midlock sits between the corner castings of two containers stowed side by side and locks them to each other, so a bay of stacks resists rolling as a single block rather than as independent columns. It engages automatically on landing, which keeps operators out of the stack. Rated to the same 250 kN tension and 210 kN shear as the semi-automatic twistlock range it works alongside.

TLA-LSH-ROD-18 / -47 / -73

Operating rods

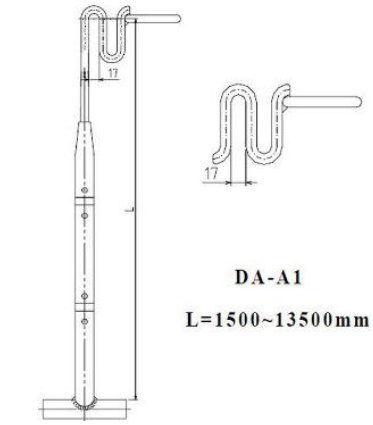

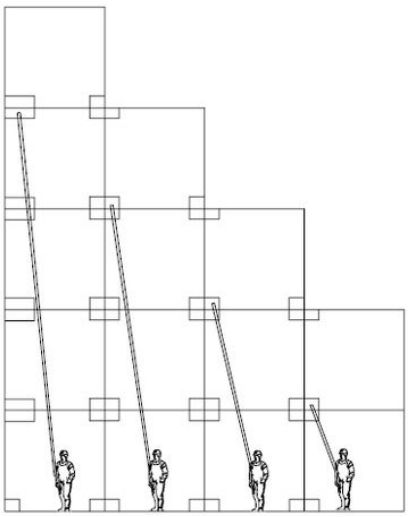

Long-reach rods for releasing semi-automatic twistlocks from deck level — three lengths covering tiers one through four, so a lashing gang works the whole stack from the ground.

TECHNICAL SPECIFICATIONS

ISO code	BD-J1/OT
Tier 1/2	1 800 mm · 1.13 kg · SKU TLA-LSH-ROD-18
Tier 2/3	4 700 mm · 2.30 kg · SKU TLA-LSH-ROD-47
Tier 3/4	7 300 mm · 3.80 kg · SKU TLA-LSH-ROD-73

FEATURES

- Three lengths cover tiers one through four from deck level
- Releases semi-automatic twistlocks without working at height
- Each length carries its own SKU
- Pairs with the semi-automatic twistlock range in Section 1

APPLICATIONS

Releasing semi-automatic twistlocks on vessel and yard stacks from deck level; container terminal lashing operations.

DESCRIPTION

A semi-automatic twistlock has to be released from below once the container above it is to be lifted. The operating rod does that from deck level: hook the rod onto the twistlock toggle and pull. Three lengths cover the practical stack — 1 800 mm for tier one to two, 4 700 mm for tier two to three, and 7 300 mm for tier three to four — keeping the lashing gang off ladders and out of the stack.

TLA-LSH-TBHJ-01 / TLA-LSH-TBKT-01

Turnbuckles

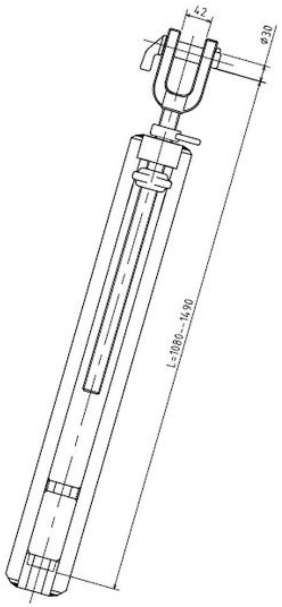

Tensioning turnbuckles for lashing bars — hook-to-jaw and knob-type ends, both rated 250 kN, tightened to take the slack out of a lashing before the vessel sails.

TECHNICAL SPECIFICATIONS

Hook to jaw	BA-A1 · 250 kN · 15.4 kg · SKU TLA-LSH-TBHJ-01
Knob type	BA-K1 · 250 kN · 15.4 kg · SKU TLA-LSH-TBKT-01
Adjustment range	1 080 – 1 490 mm
Min. Breaking Load	500 kN tension (both types)
Safe Working Load	250 kN tension (SF 2.0)
Standard	ISO 3874 · IMO CSS Code

FEATURES

- Two end types — hook-to-jaw and knob — matched to the lashing bar in use
- Both rated 250 kN in tension
- Tightened with a matching turnbuckle spanner
- Classification-society approved — GL, BV and CCS

APPLICATIONS

Tensioning lashing bars between deck lashing points and container corner castings; rail wagon and vessel securing arrangements.

DESCRIPTION

The turnbuckle is what actually takes the slack out of a lashing. It connects the deck end of a lashing bar to a D-ring or lashing eye and is wound up until the bar is tight. Two end types are stocked to match the bar: hook-to-jaw and knob. Both are rated to 250 kN and weigh 13.5 kg, and each is turned with its own spanner, and the two are not interchangeable.

TLA-LSH-BAR-xx (see variants)

Lashing bars

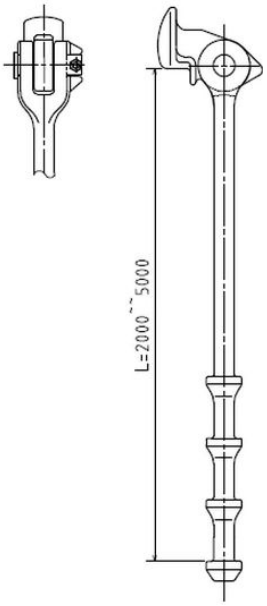

Steel lashing bars connecting a container corner casting to a deck lashing point — eye-to-swivel-head-plug and knob types, in short and long lengths for first- and second-tier lashings.

TECHNICAL SPECIFICATIONS

Eye to swivel head plug	BB-B1 · 2 400 mm and 4 700 mm · 250 kN
Knob type	BB-C1 · 2 500 mm and 5 000 mm · 250 kN
Min. Breaking Load	500 kN tension
Safe Working Load	250 kN tension (SF 2.0)
Standard	ISO 3874 · IMO CSS Code

FEATURES

- Two end types matched to the turnbuckle in use
- Short bars for first-tier lashings, long bars for second tier
- Four length/type combinations, each with its own SKU
- Extension bars available where the reach is still short

APPLICATIONS

Lashing the first and second tiers of a container stack to the vessel deck; rail wagon securing arrangements.

DESCRIPTION

The lashing bar carries the load between the container and the ship. One end takes the corner casting — either a swivel head plug through the aperture, or a knob fitting — and the other takes a turnbuckle down to the deck lashing point. Short bars (2 400 / 2 500 mm) suit first-tier lashings and long bars (4 700 / 5 000 mm) reach the second tier. Match the bar end type to the turnbuckle end type; where the reach is still short, add an extension bar.

TLA-LSH-EXTK-01 / -EXTE-01 / -EXTH-01

Extension bars & hook

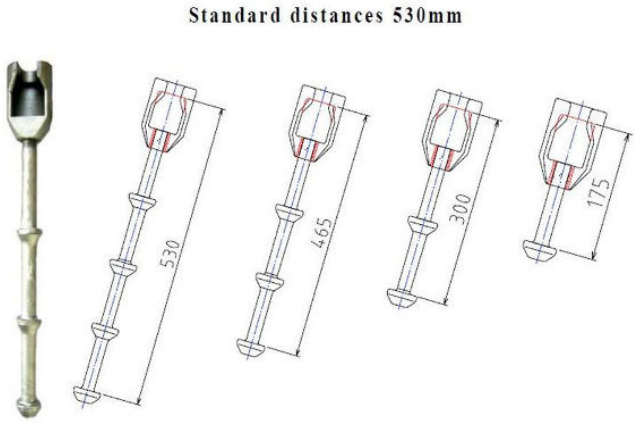

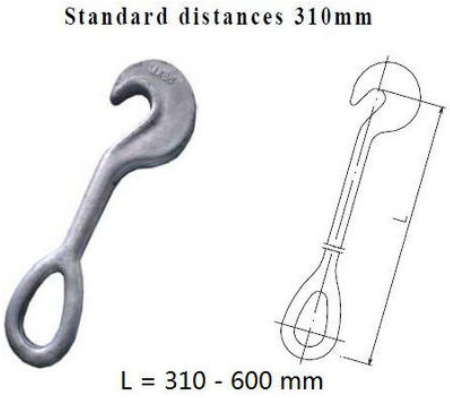

Short bars that add reach to a lashing assembly — knob type and eye-to-plug, both 250 kN, used where the standard bar does not make the lashing point.

TECHNICAL SPECIFICATIONS

Knob type	BB-D1 · 250 kN · 4.0 kg · SKU TLA-LSH-EXTK-01
Eye to plug	BB-E1 · 250 kN · 3.9 kg · SKU TLA-LSH-EXTE-01
Load Rating (SWL)	250 kN tension
Extension hook	310 mm standard · made up to 600 mm · forged · SKU TLA-LSH-EXTH-01
Standard	ISO 3874 · IMO CSS Code

FEATURES

- Adds reach where a standard lashing bar falls short
- Two bar end types to match the bar and turnbuckle in use
- Rated to the same 250 kN as the bars they extend
- Extension hook adds a single fixed step of reach — 310 mm standard, made up to 600 mm on request
- Hook is forged, not cast: eye and hook are one continuous piece
- Light enough to handle one-up at height

APPLICATIONS

Extending lashing assemblies to reach deck lashing points on wider hatch spacings; awkward stowage geometry.

DESCRIPTION

Deck lashing points are not always where the bar length assumes. The extension bar closes that gap: it inserts between the lashing bar and the turnbuckle, adding reach without dropping the rating — both types are rated to the same 250 kN as the bars they extend. Knob and eye-to-plug ends are stocked so the assembly stays matched end to end. Where the shortfall is fixed rather than variable, the extension hook adds one step of reach at the deck end without a second threaded joint: 310 mm between centres as standard, made up to 600 mm on request, and forged in one piece rather than cast.

ACCESSORIES

Accessories



- Shelves
- Access / loading ramps
- Flat rack twistlock
- D-Shackles
- Container stand

Accessories

Not everything that makes a container easier to live with or work around is a twistlock. This section gathers the smaller fittings that round out a container installation or operation — shelving, loading ramps, flat rack hardware and support stands — items that solve a specific, practical problem rather than a structural or load-bearing one.

Many of these are lower-cost, higher-frequency items compared to the rest of the catalogue, and several can be added to an existing container installation without any structural change.

CHOOSE THIS SECTION WHEN…

you need a practical add-on for a container — shelving, a ramp, flat rack hardware or support — rather than a structural or lifting fitting.

TLA-ACC-SHLF-xx (see variants)

Shelves

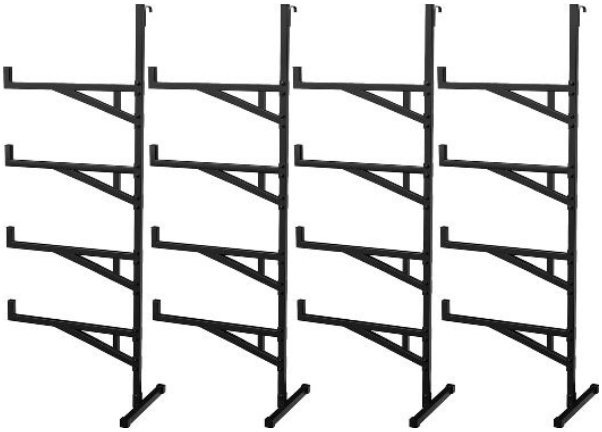

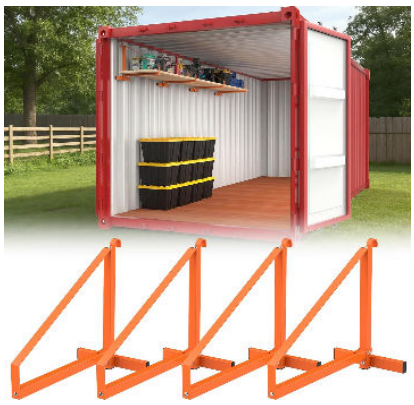

INSTALLED IN A CONTAINER

Universal container shelf brackets that hook directly into the corrugated wall ribs of standard shipping containers — no drilling, no fasteners; accepts standard timber boards to create shelving at any height. Procured via Amazon.

TECHNICAL SPECIFICATIONS

Material	Heavy-duty steel, powder-coated
Configurations	Single-tier and multi-tier (up to 4 tiers per column) brackets available
Load Capacity	Confirmed at order against the supplier's rating
Standard	Fits standard 20 ft and 40 ft ISO shipping containers

FEATURES

- Hooks engage the container wall corrugation directly — no drilling or fasteners
- Accepts standard timber boards (sourced separately) to form the shelf surface
- Repositionable — add, remove or re-level in minutes
- Multi-tier columns stack up to 4 shelf levels per bracket run
- Each configuration carries its own SKU

APPLICATIONS

Container workshops and storerooms; on-site equipment and parts storage; converted container offices and site facilities; mining camp container fitouts.

DESCRIPTION

Designed specifically for the corrugated steel wall profile of a standard shipping container, the bracket hooks engage the horizontal corrugation ribs directly, holding the bracket and any loaded shelf board in compression against the wall — no screws, anchors or adhesives. Brackets reposition without tools, and accept standard timber boards (sourced separately) to build shelving at any height. Twistlock Africa procures this item via Amazon; single-tier and multi-tier (up to 4-tier) bracket columns are both available.

TLA-ACC-RAMP-01

Access / loading ramps



Heavy-duty steel loading ramps fitting between container door corner posts for pallet and forklift access; 5-tonne capacity; ~1219 × 1200 mm footprint; Durbar anti-slip floor plate.

TECHNICAL SPECIFICATIONS

Material	Heavy-duty steel with Durbar anti-slip floor plate (fully welded)
Load Rating (SWL)	5-tonne capacity
Dimensions	Ramp width 1 219 mm — narrower than the 8 ft (2 438 mm) container width; fits between the door corner posts

FEATURES

- Bridges the ~178 mm (7") gap between a container floor and ground level
- Fits between the container door corner posts with one door open — the ramp is narrower than the 8 ft container width
- Fully welded construction; Durbar anti-slip floor plate
- Available with different loading capacities

APPLICATIONS

Pallet jack and forklift loading/unloading of shipping and storage containers; reducing health and safety risks associated with step height.

DESCRIPTION

Bridges the roughly 178 mm gap between a container's interior floor and ground level, fitting between the door corner posts with one door open — the ramp is 1 219 mm wide, not the full 8 ft (2 438 mm) width of the container. The fully welded steel construction and Durbar anti-slip floor plate are rated to 5 tonnes standard, making pallet jack and forklift loading both safer and faster.

TLA-ACC-FRTL-01

Flat rack twistlock



Flat rack stacking cones/twistlocks for locking 20ft or 40ft containers together on flat racks; spring-indexed every 90° via stainless steel spring; SWL 40 000 lbs tension / 30 000 lbs shear (MBL 80 000 lbs / 60 000 lbs).

TECHNICAL SPECIFICATIONS

Material	Steel body with stainless steel spring
Load Rating	SWL 40 000 lbs (18.1 t) tension / 30 000 lbs (13.6 t) shear — MBL 80 000 lbs (36.3 t) / 60 000 lbs (27.2 t)
Dimensions	114.3 mm W × 146 mm H
Weight	3.63 kg

FEATURES

- Zero clearance between corner castings when in use
- Spring-indexes every 90° via a stainless steel spring for fast alignment
- Locks 20 ft or 40 ft containers together on a flat rack

APPLICATIONS

Flat rack container securing; coupling containers on flat rack wagons for rail and road transport.

DESCRIPTION

A stacking cone/twistlock purpose-built for flat rack service, giving zero clearance between corner castings once seated and indexing every 90 degrees via a stainless steel spring for quick, repeatable alignment when coupling 20 ft or 40 ft containers on a flat rack.

TLA-ACC-DSHK-xx (see variants)

D-Shackles



Standard ISO shipping industry D-shackles for welded installation by a qualified welder using an approved welding procedure; several patterns and capacities, each with its own SKU.

TECHNICAL SPECIFICATIONS

Load Rating	38 t (standard pattern); other capacities available
Sizes	Various — specify ring diameter and capacity when ordering
Variants	Plain weld-on and welding-gusset patterns; further options on enquiry

FEATURES

- Standard fitting from the shipping industry
- Weld-installed by a qualified welder using an approved welding procedure
- Plain weld-on and welding-gusset patterns available
- Each variant carries its own SKU — the reference shown is the category SKU

APPLICATIONS

Permanent weld-mounted lashing points on container structures, ships and platforms.

DESCRIPTION

A standard shipping-industry D-shackle, welded into position by a qualified welder following an approved welding procedure, giving a permanent 38-ton-rated lashing point on a container structure, ship or platform. Several patterns and sizes are stocked — plain weld-on and welding-gusset among them — each with its own SKU under the category reference shown.

TLA-ACC-STAND-01

Container stand

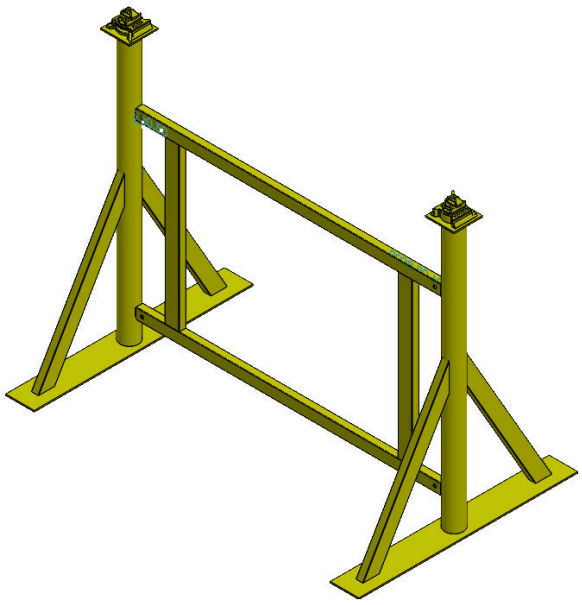

Heavy-duty bolted steel container support stands for elevating ISO shipping containers to working height (~1.9m underside clearance); rated 18T per stand; supplied as a set of 4 (full container) or set of 2 (single-end support); safety yellow finish.

TECHNICAL SPECIFICATIONS

Material	Structural steel S355JR, fully bolted, Grade 8 hardware
Load Rating (SWL)	18 t per stand
Dimensions	Underside clearance approx. 1 930 mm (76")
Weight	Approx. 281 kg per stand
Finish / Coating	Sandblast, prime and Safety Yellow paint

FEATURES

- Raises the container underside to ~1 930 mm — full walk-through and forklift clearance
- Four legs with cross-bracing, fully bolted with Grade 8 hardware (included) — no on-site welding
- Disassembles and packs flat for transport
- Set of 4 supports a full container; set of 2 supports one end
- Twistlock Africa boltable Twistlock system recommended for the container-to-stand connection

APPLICATIONS

Permanent elevated container platforms; container loading bays; workshop and site office elevations; container storage at working height with forklift access below.

DESCRIPTION

Each stand is four bolted legs with cross-bracing, raising a container's underside to roughly 1 930 mm for full walk-through and forklift clearance beneath it — no welding on site, and the assembly packs flat for transport. Supplied as a set of four (full container) or two (single-end support), each rated at 18 tonnes. A level, compacted surface or concrete pad is needed at each stand position, and for permanent installations Twistlock Africa's Boltable Twistlock system is recommended for the container-to-stand connection at the top.

11

REFERENCE APPENDIX

Engineering Reference

ISO Standards Register

Corner Casting Dimensions

Load Ratings (ISO 1496-1)



TWISTLOCK africa

Engineering Reference

Every Twistlock Africa product is engineered to the governing international and South African standards. This reference section summarises the key ISO standards, the ISO 1161 corner-casting dimensions and tolerances, and the ISO 1496-1 load ratings that determine how container hardware must perform.

It is provided as a quick design reference. For project-specific certification or calculation, contact Twistlock Africa's engineering team.

> **CHOOSE THIS SECTION WHEN…**
> you need the governing standards, dimensions and load data to specify with confidence.

Standards & Compliance

Every Twistlock Africa product is engineered to the governing international and South African standards. For project-specific certification, contact Twistlock Africa.

KEY REFERENCE DOCUMENTS

STANDARD	SCOPE
ISO 668 : 2020	Series 1 freight containers — Classification, dimensions, ratings
ISO 1161 : 2016	Series 1 freight containers — Corner and intermediate fittings (corner castings)
ISO 1496-1 : 2013	General cargo containers — Requirements, testing
ISO 3874 : 1997	Series 1 containers — Handling and securing
ISO 9367-1 : 1989	Lashing/securing of road vehicles on Ro-Ro ships — not container securing
CSS Code (2011 edition)	IMO Code of Safe Practice for Cargo Stowage and Securing
LR Container Securing Manual	Vessel-specific approval of all securing equipment

STANDARDS REGISTER — CORE STANDARDS GOVERNING TLA PRODUCTS

STANDARD	EDITION	GOVERNING BODY	SCOPE
ISO 668	2020	ISO TC 104/SC1	Series 1 containers: classification, dimensions, gross mass ratings
ISO 1161	2016	ISO TC 104/SC1	Corner and intermediate castings: dimensions, tolerances, material
ISO 1496-1	2013 (1990 text)	ISO TC 104	General cargo containers: requirements and testing (stacking, racking, lifting)
ISO 6346	1995 + Am.1 2022	ISO TC 104/SC4	Coding, identification and marking of freight containers (BIC codes)
ISO 3874	1997 + Am.1 2000	ISO TC 104/SC2	Series 1 containers: handling and securing; twistlocks, stacking cones, lashing
CSC 1972	1972 (amended)	IMO	International Convention for Safe Containers: approval, marking, examination
CTU Code	2014	IMO/ILO/UNECE	Code of Practice for Packing of Cargo Transport Units (containers, swap bodies)
CSS Code	2011 (MSC.1/Circ. 1353)	IMO MSC	Code of Safe Practice for Cargo Stowage and Securing (mandatory on ships)
DNV STD 2.23	2013	DNV GL	Container securing equipment: type approval and test requirements
SANS 10187-1	2005	SABS StanSA TC 5120	Load securement on vehicles — general requirements (SA national standard)
TRH 11	8th Ed. 2010	SA DoT / CSIR	Dimensional and mass limitations for abnormal loads on SA roads
IICL Guide	5th Ed. 2011	IICL	Guide for container inspection: grading standards (OTU/CW/WWT/As Is)
SANS 10085	2004	SABS	Design, testing and use of container handling equipment in South Africa

Corner Casting Dimensions

ISO 1161 CORNER CASTING — EXTERNAL DIMENSIONS

PARAMETER	VALUE
Length (along container)	162 mm ± 0.5 mm
Width (transverse)	162 mm ± 0.5 mm
Height	118 mm ± 0.5 mm
Wall thickness (nominal)	8 mm min
Material (min yield strength)	275 MPa

CORNER CASTING — OVAL ACCESS HOLES

PARAMETER	VALUE
Access Hole — Top — Length	139 mm ± 1.0 mm
Access Hole — Top — Width	63 mm ± 0.5 mm
Access Hole — Side (end) — Length	124 mm ± 1.0 mm
Access Hole — Side (end) — Width	51 mm ± 0.5 mm
Access Hole — Side (long) — Length	124 mm ± 1.0 mm
Access Hole — Side (long) — Width	51 mm ± 0.5 mm
Domino Clamp — Oval hole engaged	Side access hole (124 × 51 mm)

Load Ratings (ISO 1496-1)

ISO 1496-1 STACKING LOADS

PARAMETER	VALUE
Maximum gross mass (20 ft)	30 480 kg (30.48 t)
Maximum gross mass (40 ft)	32 500 kg (32.5 t)
Maximum gross mass (40 ft HC)	32 500 kg (32.5 t)
Maximum gross mass (45 ft)	32 500 kg (32.5 t)
On-chassis stacking test load	1.8× Rg per corner
Standard stack test (ship)	9× Rg total
TLA vertical spacer min design load	250 kN per corner casting

RACKING, LIFTING & END-WALL FORCES

PARAMETER	VALUE
Longitudinal racking test	75 kN
Transverse racking test	150 kN
Four corner lifting	1.25× Rg per corner
Fork pocket lifting	Under-wing test 1.25× Rg
End wall test force	0.4× Pg (P = payload)
Floor strength — concentrated load	7 260 kg over 284 cm²

Units & Load Terminology

A short primer on the units and load terms used throughout this catalogue. Safe Working Loads and certification are always confirmed per project and per order — work to the certificate, not the catalogue.

UNITS USED IN THIS CATALOGUE

QUANTITY	UNIT	NOTE
Mass	t (tonne)	1 t = 1 000 kg
Mass	kg	kilogram
Force	kN (kilonewton)	≈ 9.81 kN per tonne of force (≈ 10 kN/t as a working rule)
Length	mm	all dimensions in mm unless stated otherwise
Container length	ft	nominal ISO lengths: 10, 20, 40 and 45 ft
Angle	°	degrees

Load terminology

SWL / WLL

Safe Working Load / Working Load Limit — the maximum load a device may carry in normal service. Used interchangeably in this catalogue.

MBL

Minimum Breaking Load — the load at which a device is expected to fail. Always well above the SWL.

Proof load

A test load above the SWL but below the MBL, applied to verify a device without damaging it.

Safety factor

The ratio MBL ÷ SWL. Lifting and lashing gear carries a margin (commonly 4× to 6×); the governing standard or certificate gives the exact figure for each item.

Glossary

The full vocabulary of container hardware used in this catalogue. A concise version appears in the front matter.

Aperture
An opening in a corner casting that accepts a twistlock, lug or shackle.

Automatic twistlock
A twistlock that locks on landing and is released manually; speeds vessel and yard stacking.

Bridge fitting
A clamp linking the tops or bottoms of two side-by-side containers; also bridge clamp.

Corner casting
The cast-steel fitting at each of a container's eight corners (ISO 1161).

Corner fitting
See corner casting.

Corner post
The vertical structural column at each container corner, carrying stacking and racking loads.

Corten steel
Weathering steel used for container structures; forms a protective surface patina.

CSC plate
The safety-approval plate fitted to a container under the CSC Convention.

Dovetail
A tapered socket or foundation that locates and retains a twistlock on a trailer or slab.

Flat rack
A container with collapsible or fixed ends and no sides, for over-dimension loads.

GP
General Purpose container; standard 2.59 m external height.

Gross mass (max)
The maximum permitted combined weight of a container and its contents.

HC
High Cube container; 2.90 m external height.

ISO 668
Standard defining container external and internal dimensions and ratings.

ISO 1161
Standard defining corner-casting dimensions and apertures.

ISO 1496
Standard defining container test loads and structural strength.

Lashing
Restraining containers or cargo with bars, chains, rods or turnbuckles.

Lock rod
The vertical bar and cam mechanism that locks a container door to the frame.

MBL
Minimum Breaking Load — see Units & Load Terminology.

Payload
The cargo weight a container can carry: max gross mass minus tare.

Proof load
A non-destructive test load above SWL, below MBL.

Racking load
The horizontal force a container structure resists, e.g. from ship motion or wind.

Reefer
A refrigerated, temperature-controlled container.

Semi-automatic twistlock
A twistlock that engages on landing and releases by pull-wire; common marine lashing gear.

Shackle
A U-shaped connector closed by a pin, used to join lifting or lashing components.

Stacking cone
A locating cone set between stacked containers to align corner castings.

Stacking load
The vertical load a corner casting carries from containers stacked above (ISO 1496-1).

SWL
Safe Working Load — see Units & Load Terminology.

Tare mass
The empty weight of a container.

TEU
Twenty-foot Equivalent Unit; one 20-ft container. A 40-ft container is 2 TEU.

Turnbuckle
An adjustable tensioning device in a lashing system.

Twistlock
A rotating-cone fitting that locks into a corner casting to connect or secure containers.

WLL
Working Load Limit — see Units & Load Terminology.

12

REFERENCE APPENDIX

Container Types

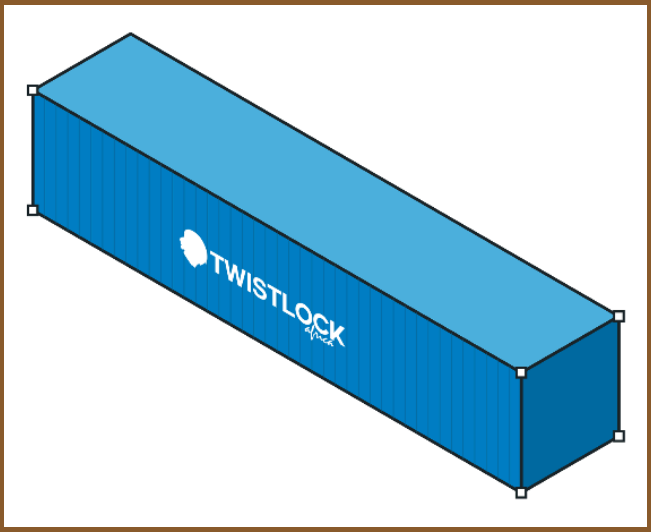

- 10' GP
- 20' GP
- 20' HC
- 40' GP
- 40' HC
- 45' HC
- 20' Reefer
- 40' HC Reefer
- 20' Open Top
- 40' Open Top
- 20' Flat Rack
- 40' Flat Rack
- 20' Tank Container

Container Types

Selecting the right hardware starts with knowing the container. This reference covers the standard ISO series-1 container types Twistlock Africa hardware interfaces with — external dimensions, internal dimensions, door openings, and tare/gross/payload weights — across general-purpose, reefer, open-top and flat-rack units.

Corner castings sit at the same ISO 1161 positions on every Series 1 container regardless of type, which is what allows one common range of twistlocks, lashing points and lifting hardware to serve the whole fleet. Dimensions below are drawn from carrier and industry reference specifications; individual units vary by manufacturer and age — the CSC (Convention for Safe Containers) plate riveted to the actual unit is always the authoritative reference for that specific container.

CHOOSE THIS SECTION WHEN…

you need to know the container itself — its dimensions, door openings and rated weights — rather than a piece of Twistlock Africa hardware.

SCOPE NOTE

This reference covers the thirteen container types Twistlock Africa's hardware range most commonly interfaces with. Bulk/hopper, half-height and open-side types are not included. Tank containers appear here for reference only — Twistlock Africa does not supply them — and they vary far more by cargo class (general chemical, food-grade, gas/pressurised) than other types: the page shown covers the general-purpose T11 chemical/food-grade tank, and pressurised gas tanks in the T50 series run to materially different tare and gross-weight figures.

A SHORT HISTORY

A short history of the container

Seventy years ago a road haulier in North Carolina got tired of watching his cargo be unloaded from a truck, carried across a wharf and stowed into a ship's hold piece by piece. What replaced that has not fundamentally changed since — and the four corner castings it settled on are the reason everything in this catalogue exists.

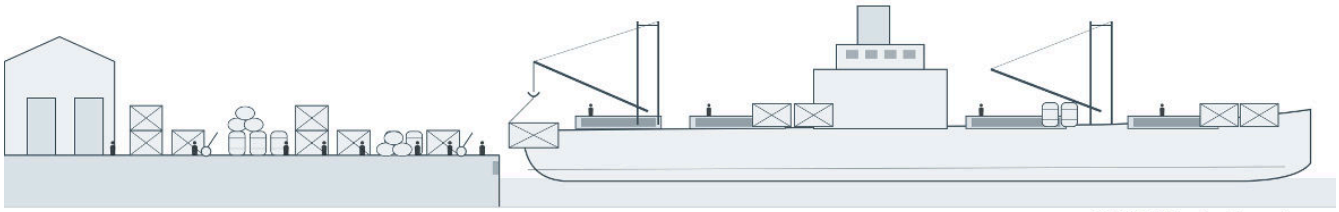

BREAK-BULK WHARF · c. 1955

US$5.83 to load one ton
Average break-bulk ship, 1956

1956

One converted tanker, 58 boxes

On 26 April the *Ideal X* sails from Port Newark for Houston carrying 58 thirty-five-foot boxes on deck — the first commercially viable container voyage.

1961

The standards work begins

ISO forms Technical Committee 104, *Freight containers*, and starts the argument about dimensions that will take most of the decade to settle.

1966

The box crosses an ocean

Sea-Land's *Fairland* sails from New Jersey in April and reaches Bremen on 6 May, opening the first international container service.

1968

The dimensions are fixed

ISO Recommendation R 668 sets the external dimensions and ratings of Series 1 containers — the moment a box loaded anywhere fits equipment everywhere.

1972

Safety becomes law

The International Convention for Safe Containers is concluded at Geneva on 2 December, creating the approval and examination regime behind the CSC plate.

1977

Two dates that matter here

The CSC enters into force on 6 September; in July, the Durban Container Terminal is established — containerisation arrives on the South African coast.

A SHORT HISTORY

From a box to an interface

1981

Every box gets a name

ISO 6346 introduces the owner code, serial number and check digit — the identification stencilled on the door of every container you will ever handle.

1984

The corner casting is specified

ISO 1161 sets out the corner fitting: the single interface that every twistlock, lashing point and lifting device in this catalogue engages.

1997

Handling and securing

ISO 3874 consolidates handling and securing practice — the standard behind twistlocks, stacking fittings and lashing arrangements.

2007

Room for the forty-five

Amendment 1 to ISO 1161 extends the corner-fitting provisions to 45 ft containers, formalising a size the market had already adopted.

2020–22

Still being revised

ISO 668 is reissued in 2020 and ISO 6346 in 2022 — the framework is seventy years old and still under active maintenance.

Today

Why none of this is history

The corner casting has outlasted every ship, crane and operator that has handled it. It is why one hardware range still fits a box built in 1975 and one built last year.

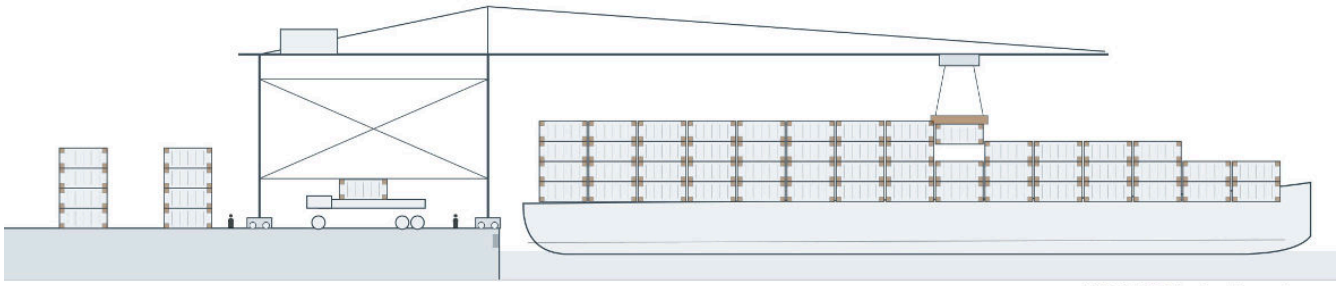

Drawn for this catalogue. Loading costs after Marc Levinson, *The Box*, Princeton University Press, 2006.

BUYING A CONTAINER

Before you buy a container

Twistlock Africa does not sell shipping containers. We have no stake in which one you buy, or from whom. Almost every other guide on this subject is published by somebody selling the box — worth remembering when you read one.

> **THE PROBLEM, STATED PLAINLY**
>
> Container fraud is not a South African problem, it is a global one, and the pattern is the same in every market: an attractive price, a professional-looking website, pressure to pay a deposit quickly, and then nothing. In South Africa, **containerfraud.co.za** is where these scams are reported and suppliers can be checked against a free database. Outside it, find the local equivalent — and use the checks below, which work in any country.

1 **Check the seller before you check the container**

Look the supplier up on containerfraud.co.za. Confirm the company registration, and confirm that the bank account name matches the company name exactly — a mismatch is the single most reliable warning sign there is. Ask for a physical address and be willing to go to it.

2 **Insist on seeing the actual container**

Not a container like it. That one, photographed today, with its container number legible. Stock photography and library images are how a box that does not exist gets sold twice.

3 **Check the container number, anywhere in the world**

Every ISO container carries an owner code, serial number and check digit under ISO 6346 — the arithmetic is in the Engineering Reference in this catalogue. The owner prefix is registered with the BIC, appointed by ISO in 1972 as the global container prefix registry, and its register is free to search at bic-code.org. A prefix belonging to nobody, or a number failing its own check digit, was invented.

4 **Verify locally, wherever you are**

Your own country's company registry, the local shipping or freight-forwarding association, and the depot the container is supposed to be standing in will each confirm or contradict a seller in one call. A seller who objects to any of those calls has told you something.

IICL5	The strictest criterion for a used container, and the condition leasing fleets work to. If a seller offers IICL, they are quoting the top of the market.
Cargo worthy	Fit to carry cargo internationally. This is where the CSC plate matters, and it is the grade most often claimed loosely.
Wind and water tight	Sealed against the weather. A statement about holes, not about structure and not about whether it may be shipped.
As is	Sold with its faults. Reasonable if you have seen it and priced the repairs; a trap if you have not.

Those four are the scale shipping lines and leasing companies use, and IICL publishes the criteria behind them. **Grades A, B and C are retail shorthand** laid on top by resellers — widely quoted but defined by nobody, so one yard's B is another yard's C. Ask which scale you are being quoted on.

There is a floor below all of it. A container so corroded that it can no longer be lifted by a spreader or sat on a chassis is a constructive total loss — scrap steel in the shape of a container. That is also where the corner castings stop being trustworthy, and everything in this catalogue depends on them. If it cannot be picked up, do not trust it to hold anything down.

BUYING A CONTAINER

What to check before you pay

1 The CSC plate

Present, legible, and in date. Without a valid plate a container may not move internationally, though it can still be perfectly good standing still. If the plate is missing or painted over, ask why.

2 The four corner castings

Look at all eight. Every twistlock, lashing point, lifting lug and clamp in this catalogue engages a corner casting — a cracked, dented or ovalised one cannot be relied on, and replacing it is a certified welding job, not a repair.

3 The doors

The most expensive thing to get wrong. Open and close both leaves fully, from the far side of a level surface. Check the cams engage the keepers, the hinges are not seized, and the seals are supple rather than perished. A door that binds now will bind worse on uneven ground.

4 The floor

The most common hidden cost. Walk it. Look for delamination, soft spots, and staining that suggests a previous cargo you would rather not know about. Floors are replaceable but never cheap.

5 The roof, and daylight

Get on a ladder — dents that pond water become perforations, and the roof is the panel most often skipped. Then close both doors with yourself inside and let your eyes adjust. Every pinhole shows. It is the fastest, cheapest test there is and almost nobody does it.

6 Rust, and which kind

Surface rust is cosmetic and normal. Pitting that has scaled or perforated is structural, and it concentrates at the bottom rail and under the door sill where water sits.

7 How it gets to site

The container is one problem; delivery is another. Confirm truck access, turning circle, overhead cables, gate width and ground bearing before you buy — a container you cannot land is worse than no container.

8 The paperwork

A tax invoice in the seller's registered name, proof they are entitled to sell it, and a release note from the depot. If any of the three is difficult, stop.

ASK US

If you want a second opinion, phone us. We take no commission from anyone who sells containers, so there is nothing in it for us either way — but we work alongside the people who do it properly and we are happy to point you at sellers we would use ourselves. It costs you nothing and it has saved our customers a great deal.



LASH SAYS

Buy from a reseller with a name, a yard you can drive to and a track record. The good ones would rather lose a sale than a reputation, and they will let you inspect before you pay a cent. If you have not dealt with them before, look them up on containerfraud.co.za first — it is free and it takes a minute.

CORNER SETOUT

Corner casting setout

Twistlock centres for 10 ft, 20 ft and 40 ft containers — the four points every foundation, trailer bed, plinth or steel frame is set out to. Plan view, corner castings shown in position.

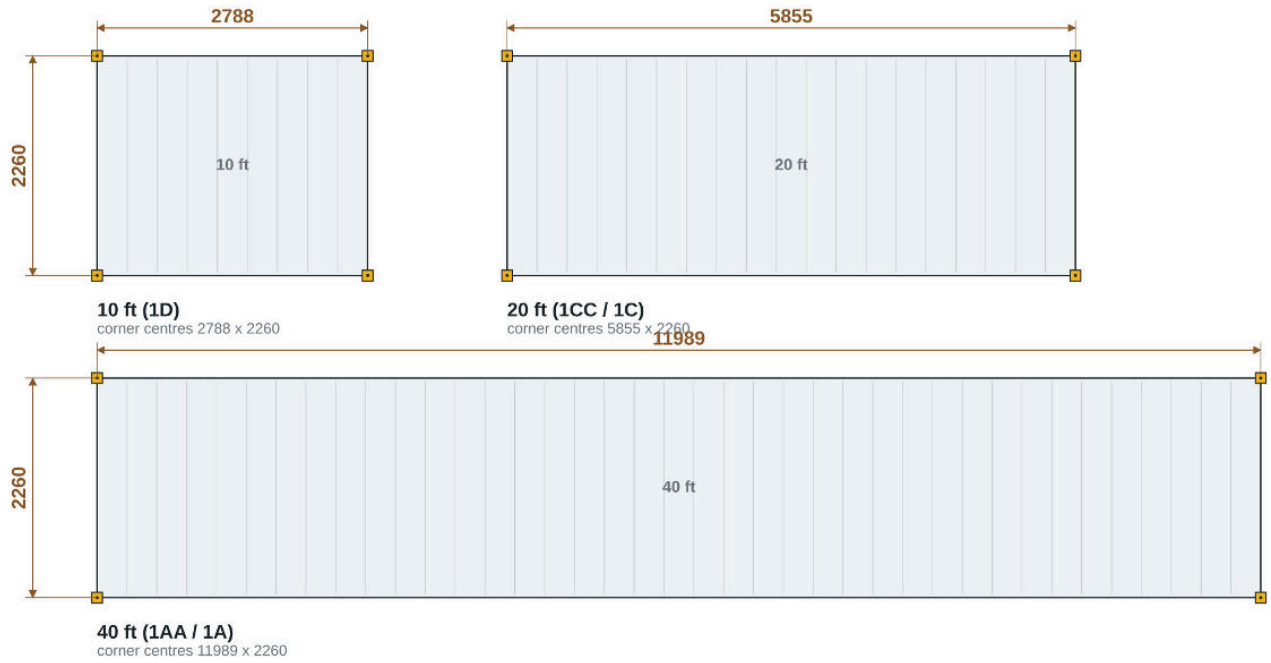

TWISTLOCK CENTRES — SETOUT DIMENSIONS

Container	Longitudinal centres	Transverse centres
10 ft (1D)	2 788 mm	2 260 mm
20 ft (1CC / 1C)	5 855 mm	2 260 mm
40 ft (1AA / 1A)	11 989 mm	2 260 mm
Gap between abutting containers	279 mm	

BEFORE YOU SET OUT

Always check these dimensions against the actual container to be used. Containers vary by manufacturer, age and repair history, and an individual unit may differ from the figures shown. Set out a trial position and confirm the fit before fixing anything permanently.

CORNER SETOUT

Combined container setout

Two shorter containers occupy the same footprint as one longer one, so a single setout serves both. Two 10 ft units sit within a 20 ft setout, and two 20 ft units within a 40 ft setout — in each case the four outer twistlocks are common to both arrangements.

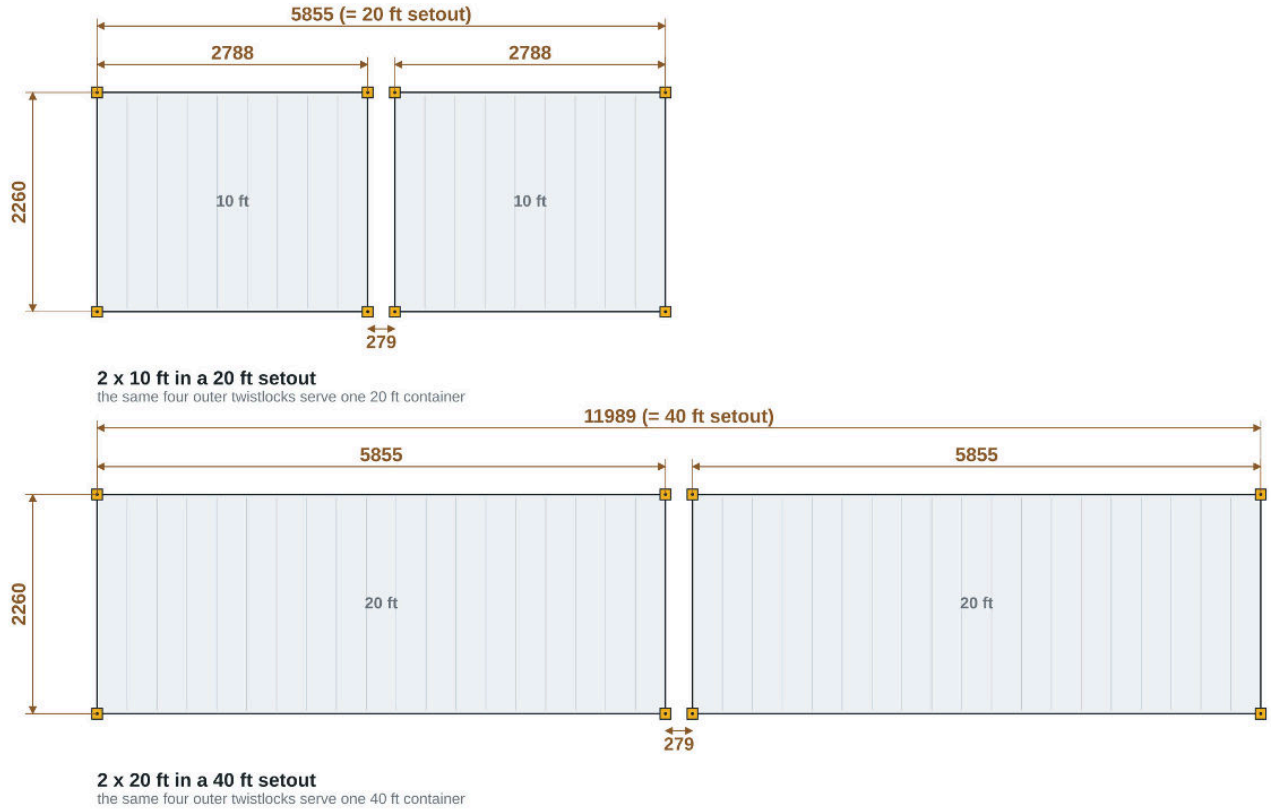

WHY THIS MATTERS

Setting a foundation out to the combined dimensions means the same fixing points accept either arrangement later — two short containers now, one long one after a site change, with no new holes drilled and no twistlocks moved. The 279 mm gap between abutting containers is what makes the two setouts coincide.

10' GENERAL PURPOSE

10' General Purpose — "3 m box"

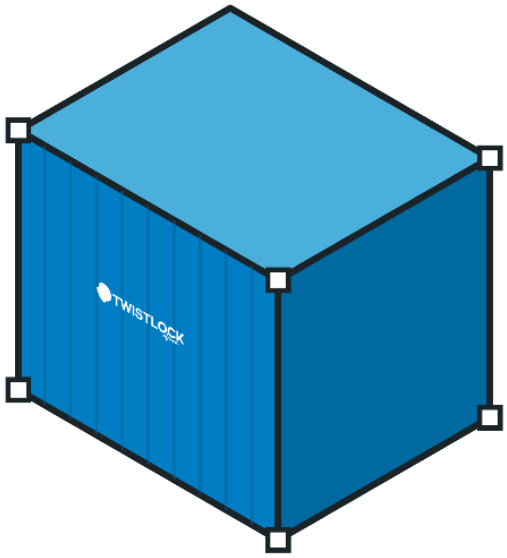

The half-length dry box, widely traded in South Africa as a site store, guard house or compact plant container. Same 2 438 mm width and the same ISO 1161 corner castings as every other box in this section, so Twistlock Africa hardware engages it identically — only the longitudinal twistlock centres change.

OVERALL (EXTERNAL) DIMENSIONS

External (L×W×H)	2 991 × 2 438 × 2 591 mm
Volume	15.9 m³

INTERNAL DIMENSIONS & DOOR OPENING

Internal (L×W×H)	2 831 × 2 352 × 2 393 mm
Door opening (W×H)	2 340 × 2 280 mm

WEIGHTS & CAPACITY

Tare	1 300 kg
Max gross	10 160 kg (ISO 668 rating for the 1D)
Max payload	8 860 kg

Standard: ISO 668 size code 1D (series-1 classification); ISO 1496-1 (dry freight containers); ISO 1161 (corner fittings). Source: AquaCat Container Traders (South Africa) 10 ft dimensions page, cross-checked against an independent industry specification reference; the two agree on every external and internal figure. Height note: ISO 668 designates the 1D at 2 438 mm external height and defines no 2 591 mm 10 ft variant — the 2 591 mm figure shown is the height as commonly built and traded in South Africa, and is corroborated by the internal height of 2 393 mm, identical to the 20 ft General Purpose. Published door widths differ slightly between sources (2 336–2 340 mm). Tare and gross vary by builder — one supplier publishes 1 480 kg tare against an 11 900 kg gross. Confirm against the CSC plate.

20' GENERAL PURPOSE

20' General Purpose — "Standard dry"

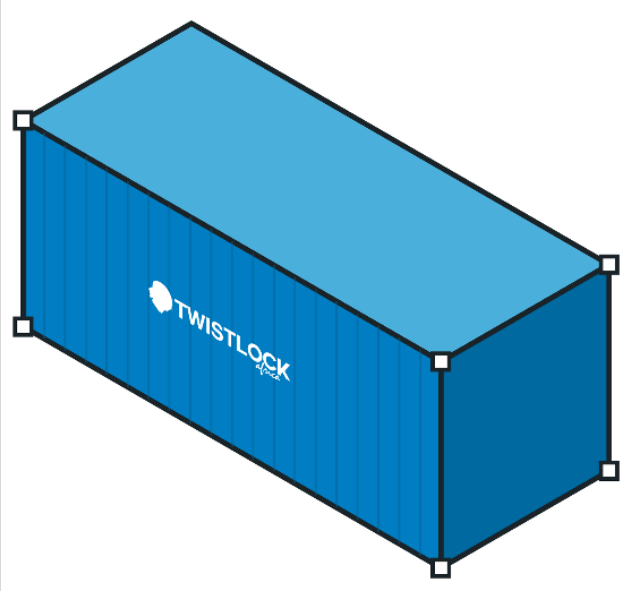

The baseline ISO dry-van container — the reference unit that Twistlock Africa's standard-range twistlocks, corner castings and lashing hardware are dimensioned against.

OVERALL (EXTERNAL) DIMENSIONS

External (L×W×H)	6 058 × 2 438 × 2 591 mm
Volume	33 m³

INTERNAL DIMENSIONS & DOOR OPENING

Internal (L×W×H)	5 896 × 2 350 × 2 393 mm
Door opening (W×H)	2 350 × 2 274 mm

WEIGHTS & CAPACITY

Tare	2 280 kg
Max gross	30 480 kg
Max payload	28 200 kg

Standard: ISO 668 (series-1 external dims); ISO 1496-1 (dry freight containers). Source: Maersk (South Africa) dry equipment specification sheet. Individual fleet ratings vary — confirm against the CSC plate.

20' HIGH CUBE

20' High Cube — "20 HC"

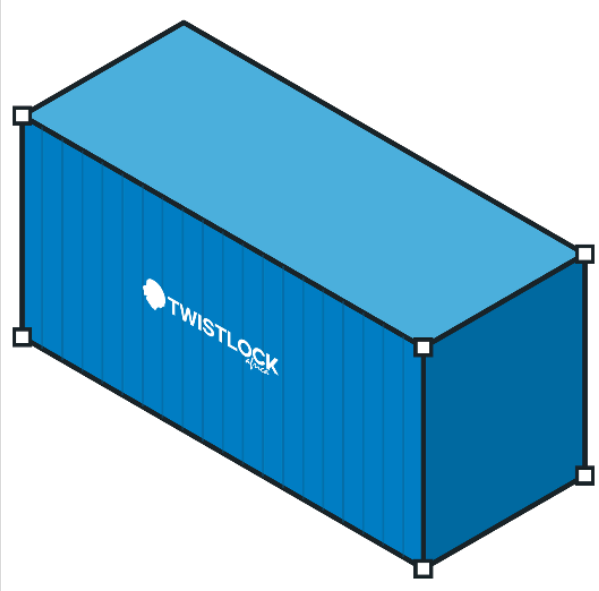

The 20 ft box with a foot of extra headroom — ISO size code 1CCC. Same footprint and the same corner-casting geometry as the standard 20 ft, so every twistlock, lashing point and lifting fitting in this catalogue engages it identically; only the height changes.

OVERALL (EXTERNAL) DIMENSIONS

External (L×W×H)	6 058 × 2 438 × 2 896 mm
Volume	37.4 m³

INTERNAL DIMENSIONS & DOOR OPENING

Internal (L×W×H)	5 898 × 2 352 × 2 689 mm
Door opening (W×H)	2 340 × 2 566 mm

WEIGHTS & CAPACITY

Tare	≈ 2 300 kg
Max gross	30 480 kg
Max payload	≈ 28 180 kg

Standard: ISO 668 size code 1CCC (series-1 external dims); ISO 1496-1 (dry freight containers). Source: HZ Containers 20 ft high-cube specification pages, cross-referenced between two of their published sheets after a third figure (a 2 280 mm door height) proved to be the standard 20 ft value carried over in error. Internal figures are consistent with the 20 ft General Purpose in this section: identical length and width, 296 mm taller against a 305 mm external step. Single publisher — tare in particular varies by builder. Confirm against the CSC plate.

40' GENERAL PURPOSE

40' General Purpose — "Forty-footer"

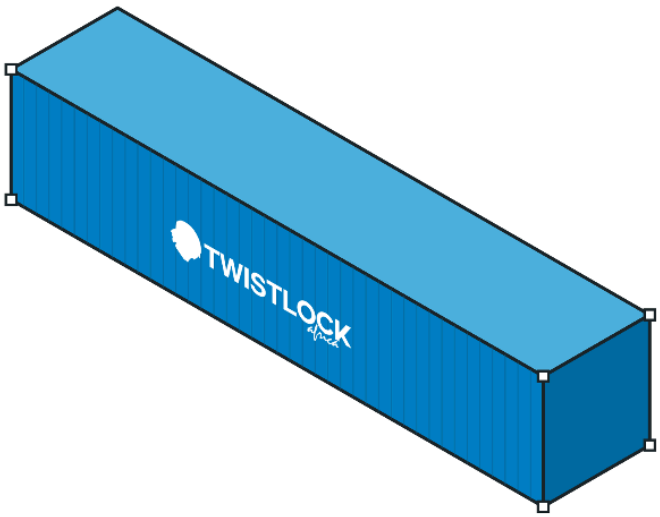

The most common ocean-freight box on the road — same cross-section as the 20' GP, doubled in length.

OVERALL (EXTERNAL) DIMENSIONS

External (L×W×H)	12 192 × 2 438 × 2 591 mm
Volume	67 m³

INTERNAL DIMENSIONS & DOOR OPENING

Internal (L×W×H)	12 032 × 2 350 × 2 393 mm
Door opening (W×H)	2 340 × 2 274 mm

WEIGHTS & CAPACITY

Tare	3 700 kg
Max gross	32 500 kg
Max payload	28 800 kg

Standard: ISO 668 (series-1 external dims); ISO 1496-1 (dry freight containers). Source: Maersk (South Africa) dry equipment specification sheet. Individual fleet ratings vary — confirm against the CSC plate.

40' HIGH CUBE

40' High Cube — "HC"

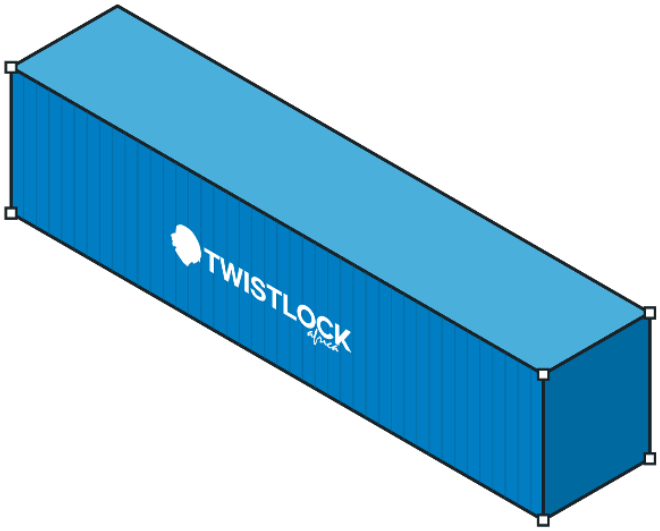

Same footprint as the 40' GP with an extra 305 mm of height (9'6" vs 8'6") — the dominant box on most modern trade lanes.

OVERALL (EXTERNAL) DIMENSIONS

External (L×W×H)	12 192 × 2 438 × 2 896 mm
Volume	76 m³

INTERNAL DIMENSIONS & DOOR OPENING

Internal (L×W×H)	12 032 × 2 350 × 2 697 mm
Door opening (W×H)	2 340 × 2 577 mm

WEIGHTS & CAPACITY

Tare	3 880 kg
Max gross	32 500 kg
Max payload	28 620 kg

Standard: ISO 668 (series-1 external dims); ISO 1496-1 (dry freight containers). Source: Maersk (South Africa) dry equipment specification sheet. Individual fleet ratings vary — confirm against the CSC plate.

45' HIGH CUBE

45' High Cube — "Forty-five HC"

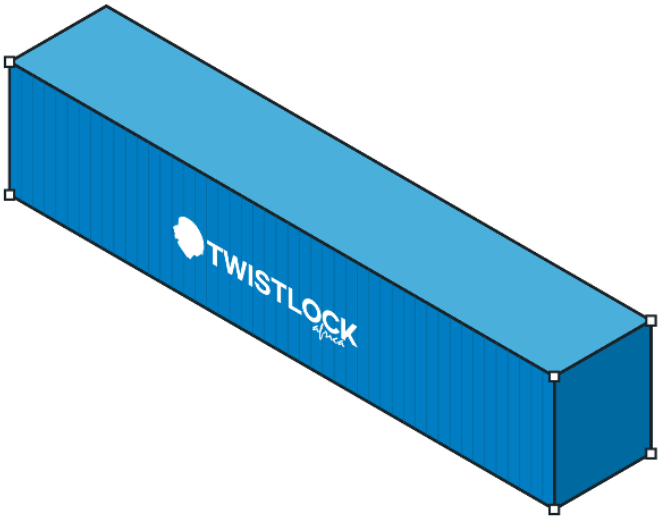

The longest standard dry box in general circulation, mainly used on regional/domestic moves rather than deep-sea strings.

OVERALL (EXTERNAL) DIMENSIONS

External (L×W×H)	13 716 × 2 438 × 2 896 mm
Volume	85 m³

INTERNAL DIMENSIONS & DOOR OPENING

Internal (L×W×H)	13 556 × 2 352 × 2 698 mm
Door opening (W×H)	2 340 × 2 585 mm

WEIGHTS & CAPACITY

Tare	4 900 kg (steel) / 4 900 kg (aluminium — same rated tare)
Max gross	32 500 kg
Max payload	27 600 kg

Standard: ISO 668 (series-1 external dims); ISO 1496-1 (dry freight containers). Source: Maersk (South Africa) dry equipment specification sheet, steel and aluminium variants. Individual fleet ratings vary — confirm against the CSC plate.

20' REEFER

20' Refrigerated — "Twenty reefer"

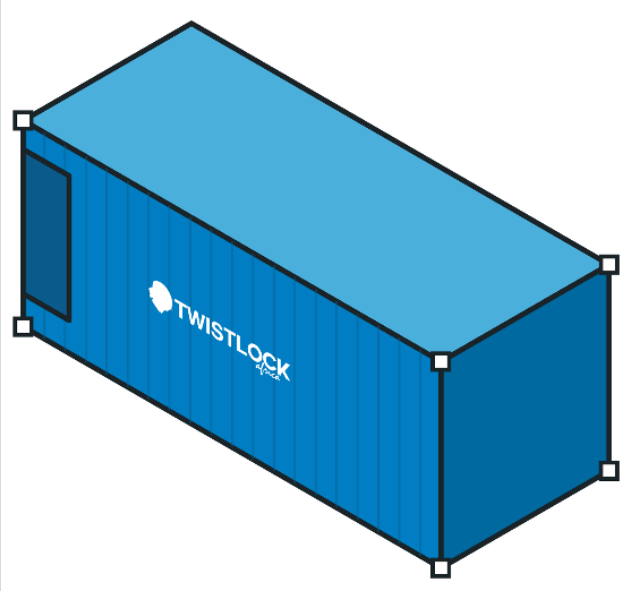

Insulated and machinery-fitted; internal volume is significantly reduced from the equivalent dry box to accommodate insulation and the refrigeration unit.

OVERALL (EXTERNAL) DIMENSIONS

External (L×W×H)	6 058 × 2 438 × 2 591 mm
Volume	27 m³

INTERNAL DIMENSIONS & DOOR OPENING

Internal (L×W×H)	5 451 × 2 290 × 2 167 mm
Door opening (W×H)	2 290 × 2 212 mm

WEIGHTS & CAPACITY

Tare	2 990 kg
Max gross	30 480 kg
Max payload	27 490 kg

Standard: ISO 668 (series-1 external dims); ISO 1496-2 (thermal containers). Source: Maersk (South Africa) reefer equipment specification sheet, standard reefer variant. Reefer sub-models (Starfresh, Starcare, Magnum, Super Freezer, etc.) vary in internal dims and tare — confirm the specific unit's CSC plate.

40' HC REEFER

40' High Cube Reefer — "HC Reefer"

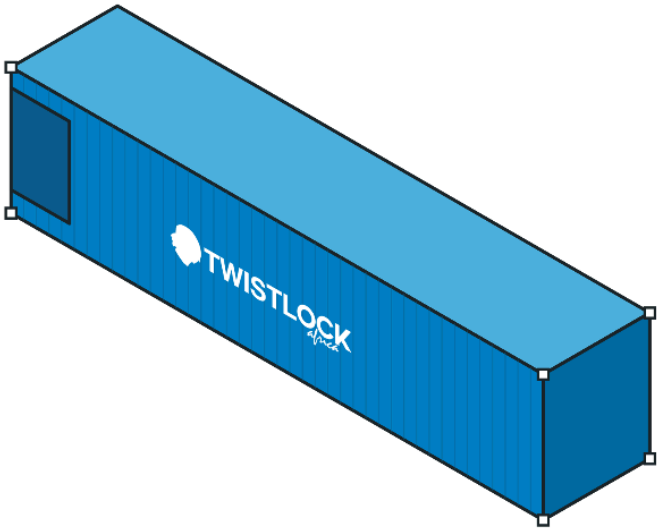

The standard deep-sea reefer box; the machinery unit at the door end draws roughly 600 mm off the internal length compared to an equivalent dry box.

OVERALL (EXTERNAL) DIMENSIONS

External (L×W×H)	12 192 × 2 438 × 2 896 mm
Volume	67.5 m³

INTERNAL DIMENSIONS & DOOR OPENING

Internal (L×W×H)	11 580 × 2 275 × 2 415 mm
Door opening (W×H)	2 276 × 2 471 mm

WEIGHTS & CAPACITY

Tare	4 520 kg
Max gross	34 000 kg
Max payload	29 480 kg

Standard: ISO 668 (series-1 external dims); ISO 1496-2 (thermal containers). Source: Maersk (South Africa) reefer equipment specification sheet, standard reefer variant. Reefer sub-models (Starfresh, Starcare, Magnum, Super Freezer, etc.) vary in internal dims and tare — confirm the specific unit's CSC plate.

20' OPEN TOP

20' Open Top — "Open top"

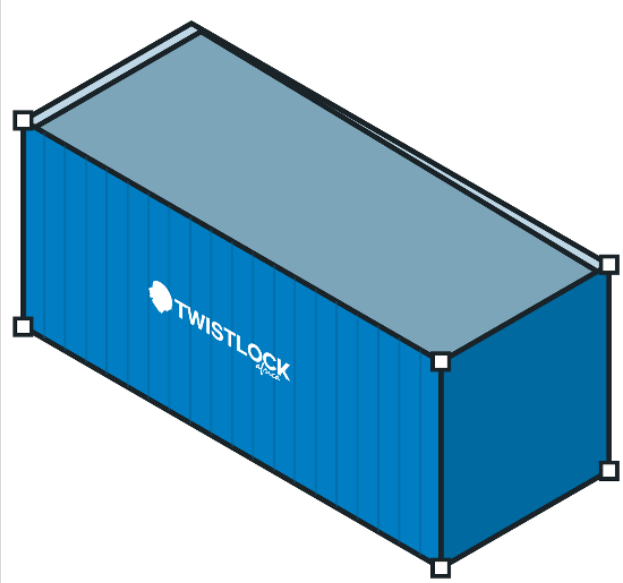

Standard GP external envelope with a removable tarpaulin roof in place of a fixed steel roof — for cargo that must be loaded from above or exceeds standard door-height clearance.

OVERALL (EXTERNAL) DIMENSIONS

External (L×W×H)	6 058 × 2 438 × 2 591 mm (shares the GP series-1 envelope)
Roof opening (L×W)	5 680 × 2 250 mm

INTERNAL DIMENSIONS & DOOR OPENING

Internal (L×W)	5 900 × 2 340 mm
Door opening (W×H)	2 290 × 2 250 mm

WEIGHTS & CAPACITY

Tare	~2 350 kg
Max gross	30 480 kg (ISO series-1 rating)
Max payload	~28 200 kg

Standard: ISO 668 (series-1 external dims); ISO 1496-1 (open-top variant). Source: Blue Water Shipping container specification toolbox. Open-top tare/payload vary more than dry/reefer between manufacturers — confirm against the CSC plate before use in a firm quote.

40' OPEN TOP

40' Open Top — "40 Open top"

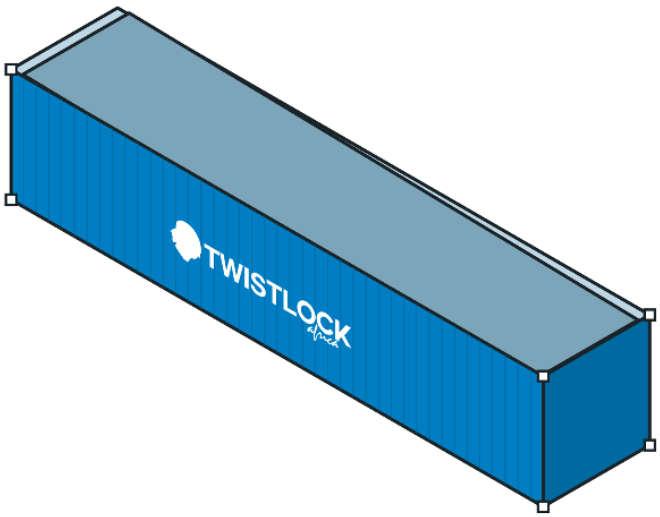

Standard 40' GP external envelope with a removable tarpaulin roof — commonly used for machinery, timber and other over-height cargo loaded by crane.

OVERALL (EXTERNAL) DIMENSIONS

External (L×W×H)	12 192 × 2 438 × 2 591 mm (shares the GP series-1 envelope)
Roof opening (L×W)	11 810 × 2 220 mm

INTERNAL DIMENSIONS & DOOR OPENING

Internal (L×W)	12 030 × 2 340 mm
Door opening (W×H)	2 290 × 2 250 mm

WEIGHTS & CAPACITY

Tare	~3 750 kg
Max gross	30 480 kg (ISO series-1 rating)
Max payload	~26 600 kg

Standard: ISO 668 (series-1 external dims); ISO 1496-1 (open-top variant). Source: Blue Water Shipping container specification toolbox. Open-top tare/ payload vary more than dry/reefer between manufacturers — confirm against the CSC plate before use in a firm quote.

20' FLAT RACK

20' Flat Rack — "Flat rack"

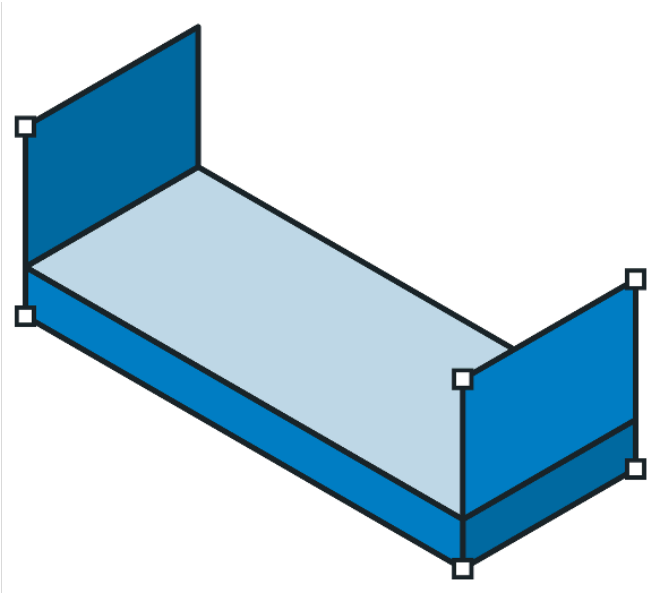

A loaded deck with collapsible end structures instead of full side/roof walls — for oversized or awkward-shaped cargo (pipes, machinery, coils) loaded from the top or sides.

OVERALL (EXTERNAL) DIMENSIONS

External (L×W×H)	5 970 × 2 360 × 2 240 mm

INTERNAL DIMENSIONS & DOOR OPENING

Internal deck (L×W)	5 700 × 2 350 mm

WEIGHTS & CAPACITY

Tare	2 360 kg
Max payload	~27 150 kg (varies significantly by manufacturer/rating)

Standard: ISO 668 (series-1 external dims, flat-rack envelope); ISO 1496-5 (platform / flat-rack containers). Source: Blue Water Shipping container specification toolbox. Flat-rack payload ratings vary widely (from ~27t general-purpose to 40t+ heavy-duty units) — confirm the specific unit's CSC plate before quoting.

40' FLAT RACK

40' Flat Rack — "40 Flat rack"

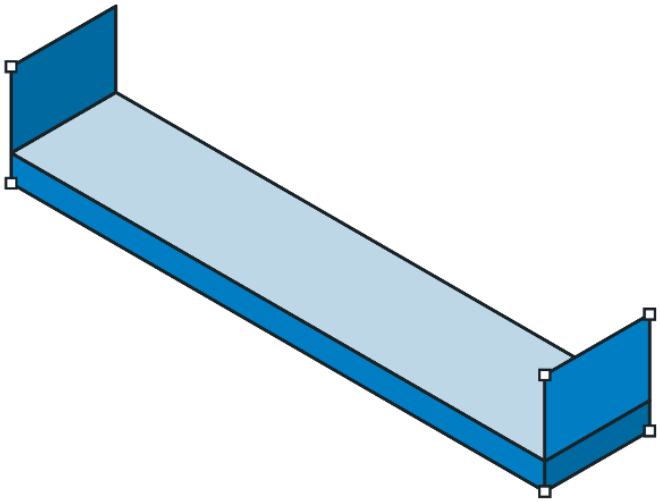

The 40' equivalent flat rack platform — lower tare weight than an enclosed box lets it carry a substantially higher payload for oversized/heavy cargo.

OVERALL (EXTERNAL) DIMENSIONS

External (L×W×H)	12 060 × 2 370 × 2 280 mm

INTERNAL DIMENSIONS & DOOR OPENING

Internal deck (L×W)	11 660 × 2 370 mm

WEIGHTS & CAPACITY

Tare	~4 900 kg (typical range 4 795–5 200 kg)
Max payload	~39 300 kg (varies significantly by manufacturer/rating, up to ~45t+ on heavy-duty units)

Standard: ISO 668 (series-1 external dims, flat-rack envelope); ISO 1496-5 (platform / flat-rack containers). Source: Blue Water Shipping container specification toolbox. Flat-rack payload ratings vary widely between manufacturers — confirm the specific unit's CSC plate before quoting.

20' TANK CONTAINER (T11)

20' Tank Container — "ISO tank / T11"

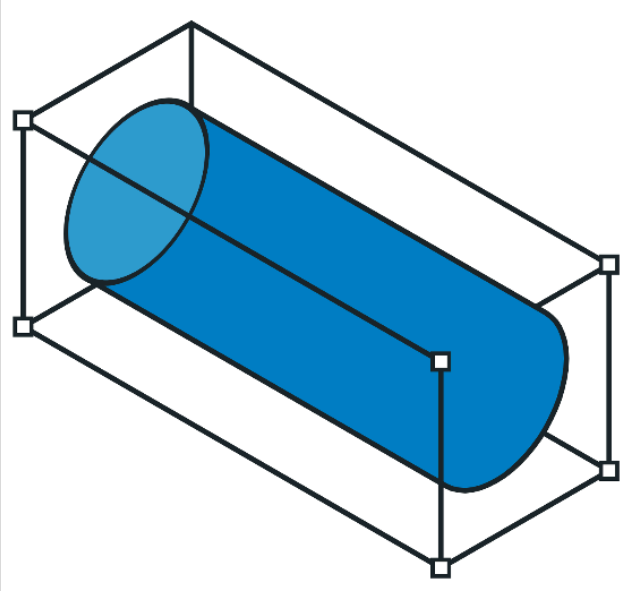

A cylindrical stainless-steel pressure vessel mounted in a standard 20' ISO frame — for bulk liquid chemicals, foodstuffs and other non-hazardous or hazardous liquid cargo. Frame envelope and corner-casting positions match the standard 20' box, so Twistlock Africa's standard-range hardware still applies at the corners; the barrel itself is not a Twistlock Africa product.

OVERALL (EXTERNAL) DIMENSIONS

External frame (L×W×H)	6 058 × 2 438 × 2 591 mm (standard ISO series-1 20' envelope)

TANK VESSEL

Capacity	21 000–26 000 litre (T11 family; 26 000L most common)
Shell material	316L stainless steel, 4.4–4.6 mm
Working / test pressure	4 bar / 6 bar
Design code	ASME VIII Div. 1

WEIGHTS & CAPACITY

Tare	~3 460–3 800 kg (varies by capacity variant, 21 000–26 000L)
Max gross	36 000 kg
Max payload	~32 200–32 540 kg (varies by capacity variant)

Standard: ISO 1496-3 (tank containers); UN Portable Tank / IMDG / RID-ADR approvals; CSC. Source: Eurotainer and Seaco Global T11 standard tank container datasheets (two independent tank-container lessors, figures cross-checked and consistent). Covers the general-purpose chemical/food-grade T11 type only — pressurised gas tank containers (T50 series) are built to a different pressure rating with materially different tare/gross figures and are not represented by this page. Always confirm the specific unit's CSC plate and T-code before use.

13

REFERENCE APPENDIX

Boltable Footprints

- 191 × 237 single
- 368 × 237 double
- 191 × 243 single
- 320 × 200 single, slotted
- 320 × 200 single, turned
- 510 × 200 double, slotted
- 259 × 184 single, slotted
- 384 × 206 double, slotted
- 200 × 200 standard
- 200 × 280
- 250 × 270

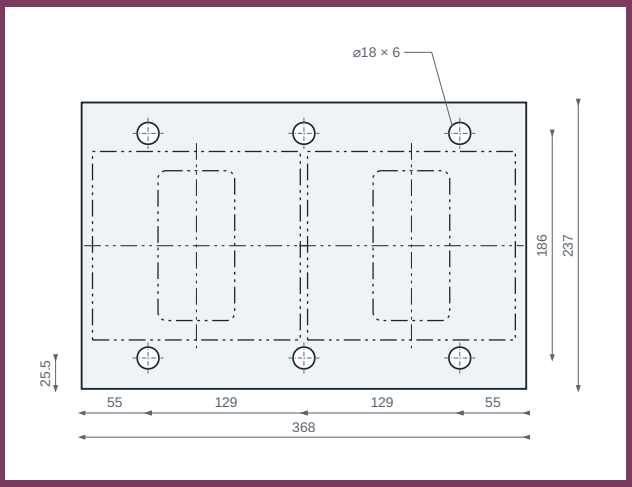

Boltable Footprints

The boltable twistlock footprints Twistlock Africa builds to, drawn to one scale so they can be compared directly. Each sketch gives the base plate, the holes in their true positions, and the dimensions needed to set out a foundation or drill a bed — and nothing else.

The twistlock itself is shown in phantom: the outer rectangle is its plan envelope, the inner one the part that passes through the corner casting, 124 × 63.5 mm. Two plates can share a hole pattern and still take the twistlock on different axes, which is why the orientation is drawn rather than described.

Bolt sizes, grades and torque are not given here: they follow the foundation design, not the footprint. Load ratings appear on the product pages in Section 2 and on the individual drawings, not in this appendix.

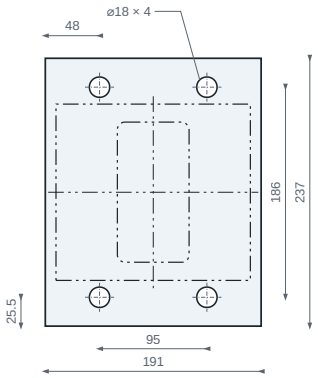

191 × 237 single

Single boltable twistlock foundation

Plate (W × L × t)	191 × 237 × 16 mm
Holes	4 × ø18
Bolt pitch	95 × 186 mm
Type	Fabricated foundation

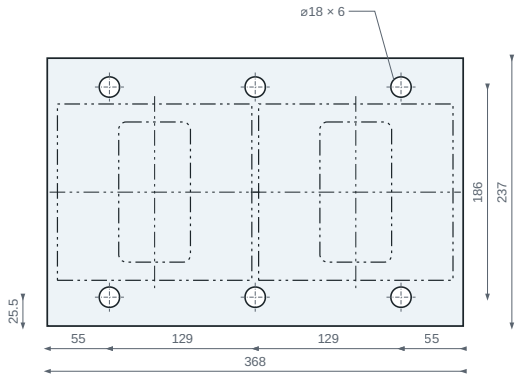

368 × 237 double

Double boltable twistlock foundation

Plate (W × L × t)	368 × 237 × 16 mm
Holes	6 × ø18
Bolt pitch	258 × 186 mm
Type	Fabricated foundation

Twistlock centres 178 mm. Six holes — the centre pair is shared.

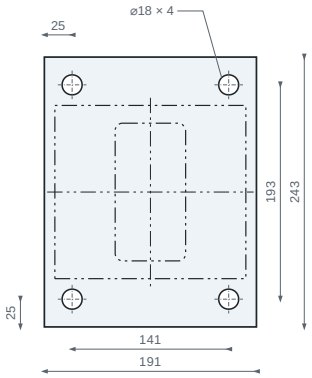

191 × 243 single

Single boltable twistlock foundation

Plate (W × L × t)	191 × 243 × 16 mm
Holes	4 × ø18
Bolt pitch	141 × 193 mm
Type	Fabricated foundation

Same plate width as the 191 × 237 single, different bolt pitch. A bed drilled for one will not take the other.

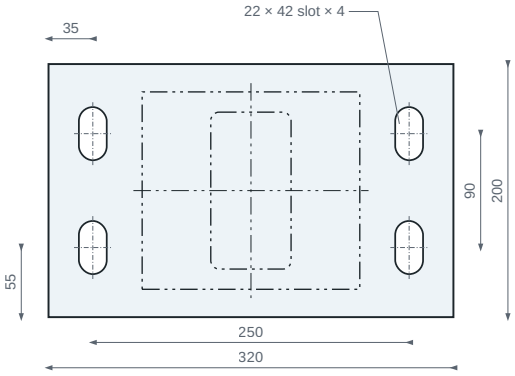

320 × 200 single, slotted

One twistlock, centred

Plate (W × L × t)	320 × 200 × 16 mm
Holes	4 × 22 × 42 slot
Bolt pitch	250 × 90 mm
Type	Fabricated foundation

Slotted holes give ±10 mm of adjustment per bolt. S355JR, laser cut, blasted before welding, 8 mm fillet weld all round, hot dip galvanised after welding.

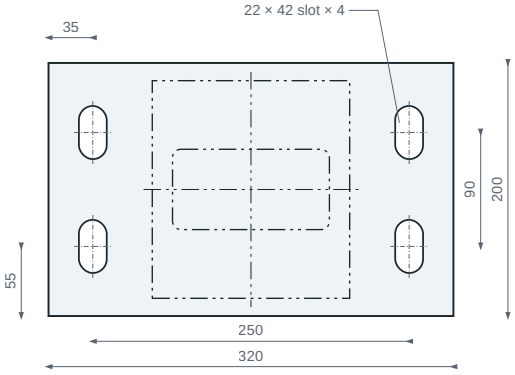

320 × 200 single, turned

One twistlock, turned 90°

Plate (W × L × t)	320 × 200 × 16 mm
Holes	4 × 22 × 42 slot
Bolt pitch	250 × 90 mm
Type	Fabricated foundation

Same plate and same slots as the footprint before it. The twistlock is turned through 90° — that is the whole difference between the two.

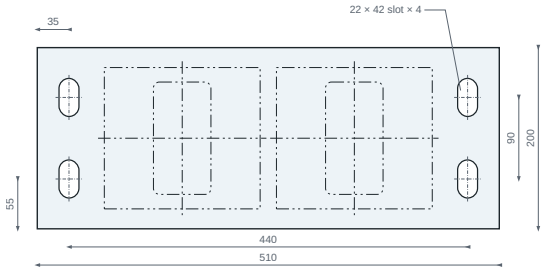

510 × 200 double, slotted

Two twistlocks at 190 mm centres

Plate (W × L × t)	510 × 200 × 16 mm
Holes	4 × 22 × 42 slot
Bolt pitch	440 × 90 mm
Type	Fabricated foundation

Two twistlocks 160 mm from each end, both on the plate centreline. Same four slots as the 320 plate: the plate gets longer, the fixing pattern does not get denser.

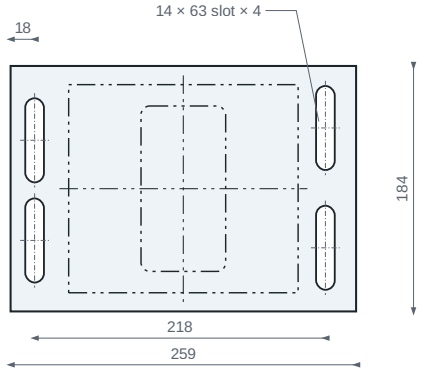

259 × 184 single, slotted

Left- and right-hand

Plate (W × L × t)	259 × 184 × 16 mm
Holes	4 × 14 × 63 slot
Bolt pitch	218 × 89.8 mm
Type	Fabricated foundation

One plate, two hands — left and right differ in the twistlock, not the hole pattern. Slotted holes with 7 mm end radii. A 25 × 45° chamfer on one side and a 15 mm radius on the other is what makes the plate handed.

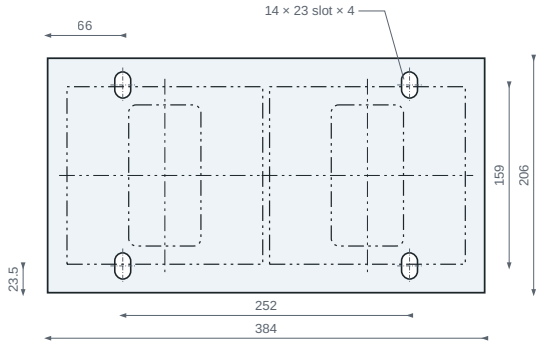

384 × 206 double, slotted

Two twistlocks at 178 mm centres

Plate (W × L × t)	384 × 206 × 16 mm
Holes	4 × 14 × 23 slot
Bolt pitch	252 × 159 mm
Type	Fabricated foundation

The same twistlock spacing as the 368 × 237 double on a different plate. Slotted holes with 7 mm end radii. 25 × 45° chamfer on all four corners. Mild steel 16 mm.

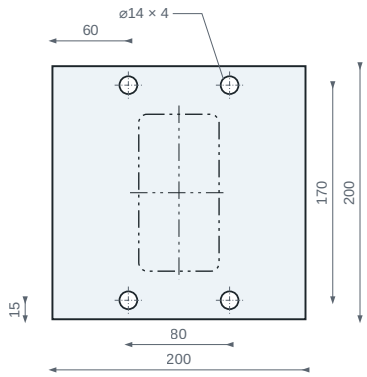

200 × 200 standard

Cast or fabricated

Plate (W × L × t)	200 × 200 × 16 mm
Holes	4 × ø14
Bolt pitch	80 × 170 mm
Type	Cast or fabricated

Cast boltable, and can also be fabricated — same footprint either way. Standard pitch shown; hole pitch and diameter can be changed to suit, with additional cost and lead time. Available left and right handed. Only the penetration is drawn: it is set by the corner casting and is the same for both constructions.

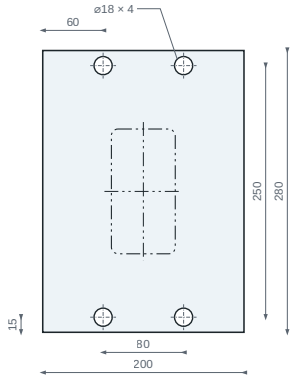

200 × 280

Long plate

Plate (W × L × t)	200 × 280 × 16 mm
Holes	4 × ø18
Bolt pitch	80 × 250 mm
Type	Cast or fabricated

Same 80 mm transverse pitch as the 200 × 200, 80 mm further apart along the plate. Ø18 holes, not the Ø14 of the 200 × 200.

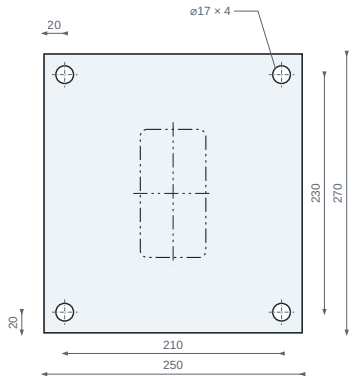

250 × 270

Large footprint

Plate (W × L × t)	250 × 270 × 16 mm
Holes	4 × ø17
Bolt pitch	210 × 230 mm
Type	Cast boltable

Ø17 holes — neither the Ø18 of the 191 and 368 plates nor the Ø14 of the 200 × 200.

Working from these footprints

BEFORE YOU DRILL

These are footprints, not fabrication drawings. Before anything is drilled or cast in, ask Twistlock Africa for the released drawing of the footprint you are working to — it carries the tolerances, the weld preparation and the material specification that a footprint cannot, and it is the document to build from.

Revision History

This catalogue is a controlled document. Every page carries its revision number and date in the footer, so a page pulled out of context can still be checked against the current issue.

DOCUMENT CONTROL

Document title
Product & Solutions Catalogue 2026

Document number
TLA-CAT-2026

Current revision
1.0

Issue date
20 Sep 2026

Status
Issued for publication — online edition

Prepared by
Twistlock Africa

Approved by
R. Siebenhaar

REVISION RECORD

REV	DATE	DESCRIPTION OF CHANGE	PAGES	BY
0.0	1 Sep 2026	First published issue, released for Electra Mining 2026 as an online edition. Section 13, Boltable Footprints, added as a reference appendix: eleven base plates and hole patterns drawn to one scale, three to a page, with the twistlock shown in phantom. Section 12 gained a 10 ft (3 m) General Purpose page and all thirteen container types were redrawn in the section-hero style; the two history drawings, the two corner-setout drawings, the ten project photographs and the dovetail slipper setout drawing were restored after being lost from the build. Ten-strand audit actioned: Section 11 running tab corrected on five pages; literal HTML entities removed from pp38, 46 and 125; thousands separators normalised to spaces and the full stop confirmed as the decimal separator throughout, per South African practice; maximum gross mass reconciled between the Engineering Reference and the Container Types pages; ISO 1496-1 racking forces corrected; corner casting mounting bracket load statement corrected; pulling lug safe working load confirmed; lifting frame certification statement rewritten to describe per-unit design and proof-load testing. Cover date and revision updated to the release issue.	All	Twistlock Africa
1.0 •	20 Sep 2026	TLA-SEC-LBXL-01 Loose lock box added, Section 4, p75. TLA-TRN-EUTL-01 European trailer lock in-use photo added, p79. Pages 76–158 renumbered.	75; 79; 76–158	Twistlock Africa

Checking a page. The marker at the foot of every page reads **REV 1.0 · 20 SEP 2026**. If a page in your copy shows an earlier revision than the one recorded above, that page has been superseded — request the current issue before quoting or specifying from it.
Specifications. Products are subject to continuous development. Dimensions, ratings and finishes stated in this catalogue are correct at the revision date shown and may change without notice. Confirm critical figures with Twistlock Africa before design or purchase.